FHWA REGION NO.	STATE	PROJECT NO.	YEAR	SHEET NO.	TOTAL SHEETS
7	KANSAS	87 N-0088-01	1999	12	38

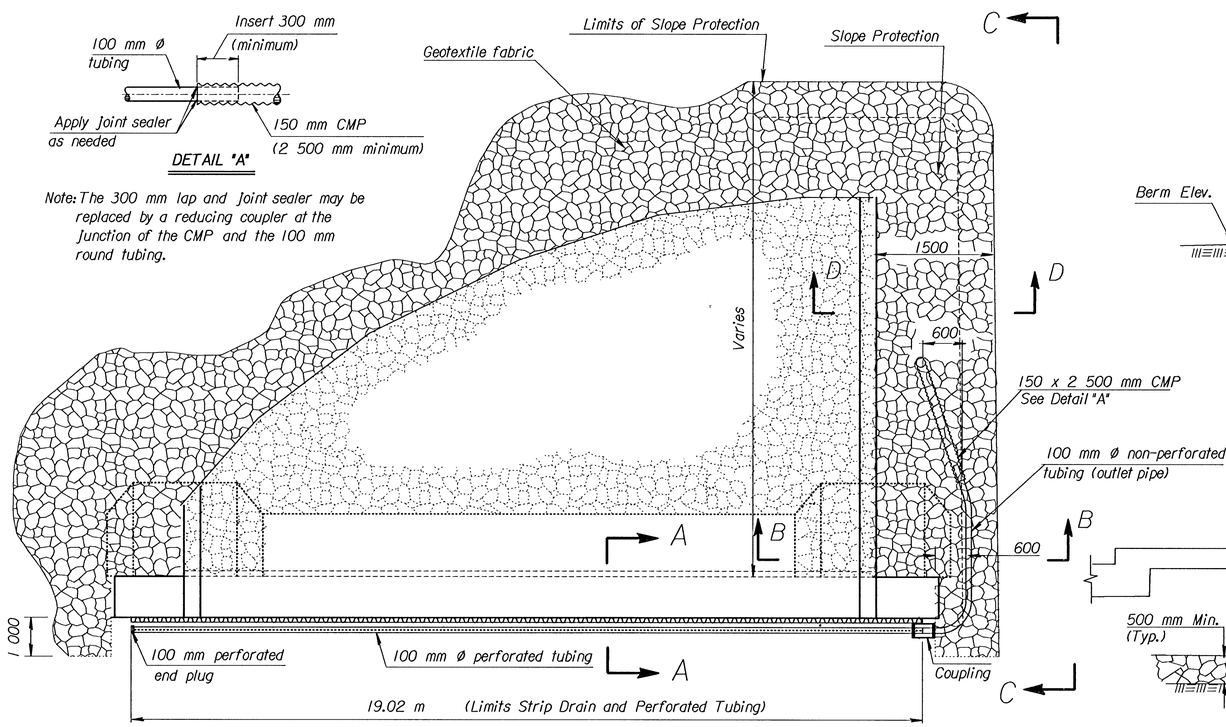

PLAN

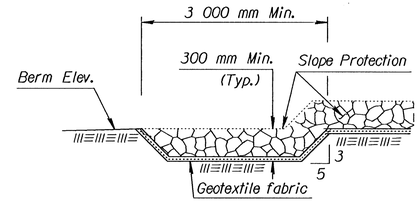

SECTION B-B

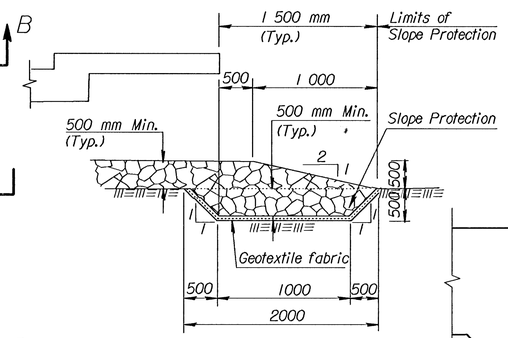

SECTION D-D

(Typ. toewall at upstream and downstream ends)

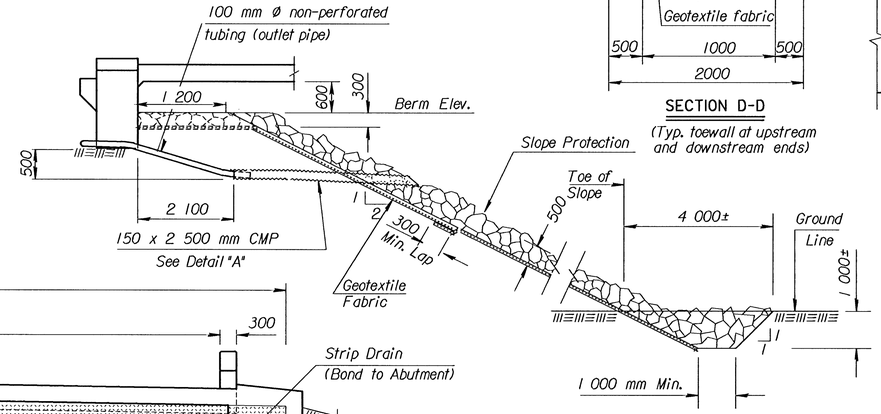

SECTION C-C

Note: The toe shall extend the entire width of the Slope Protection.

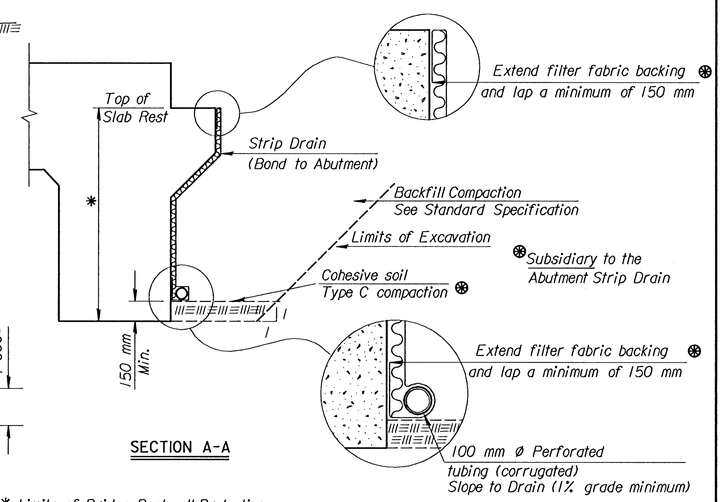

SECTION A-A

* Limits of Bridge Backwall Protection System (by Bridge Contractor)

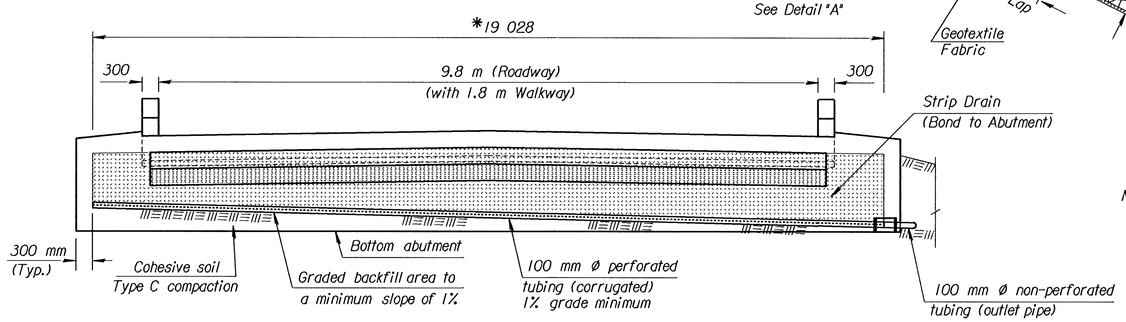

ELEVATION

GENERAL NOTES

ABUTMENT STRIP DRAIN: The Bridge Contractor shall excavate to the limits shown on the Bridge Excavation sheet, grade the bottom of the backfill area, place the strip drain, and place the perforated pipe, the outlet pipe, the CMP, and the backfill.

BRIDGE BACKWALL PROTECTION SYSTEM: Apply a Bridge Backwall Protection System to the approach side of the abutments and the wings in accordance with KDOT Specifications and the manufacturer's recommendations. Cover the abutments and wings to the limits shown on the details. Prior to backfilling, repair any damage done to the system at no charge to the state.

Place perforated pipe next to the strip drain. Use non-perforated pipe outside the limits of the strip drain. Enclose the perforated pipe with the extension of the filter fabric.

Compact the abutment backfill. See the KDOT Specifications.

Perforated pipe and non-perforated outlet pipe shall be corrugated polyethylene tubing conforming to the KDOT Specifications.

Fit the CMP end section with 6 mm galvanized mesh screen to prevent the entrance of rodents. Seal the Joint between the outlet pipe and the end section with a Joint sealer. Place coarse aggregate at the outlet end as shown.

Grade the bottom surface of the excavated area to drain. Backfill this area with a cohesive type soil. The soil should be a silty clay or clay under the Kansas Classification System with a minimum plasticity index of 20. Compact the material to Type C standards.

Place the outlet pipe on the downstream side of structures over streams and as shown or noted on other crossings (See the "Construction Layout" sheet).

SUMMARY OF QUANTITIES (2 Abutments)		
Abutment Strip Drain	51	m^2
Bridge Backwall Protection System	54	m^2
Items Subsidiary to Strip Drain		
100 mm Ø Perforated Pipe	38	m
100 mm Ø Outlet Pipe	9	m
150 mm Ø CMP	5.0	m
Items Subsidiary to Slope Protection		
Geotextile Fabric	59	m^2

NO.	DATE	REVISIONS	BY	APP'D
3				
2				
1	4-4-97	Current release		

KANSAS DEPARTMENT OF TRANSPORTATION

Br. No. 5304008700C1020 Sta. 1+450.20

ABUTMENT
STRIP DRAIN
(Skews, Full Geotech, No Trough)
SEDGWICK CO.

SHEET NO. OF	SCALE	APP'D		
DESIGNED SDH	DETAILED	QUANTITIES SDH	CADD	BAF
DESIGN CK. MDK	DETAIL CK. LRR	QUAN. CK. MDK	CADD CK.	CEH/JPJ 8/96

Plotted By : $$USERNAME$$ Std. Base File : /usr2/stand/si/bri04csi.dgn
Plot File : $$$$$$$$$$$$$$DGNSPEC$$$$$$$$$$$$$$ Server File : /usr2/
Plot Date : $$$$$$$$STIME$$$$$$$$ Server : witch View= PLOT1