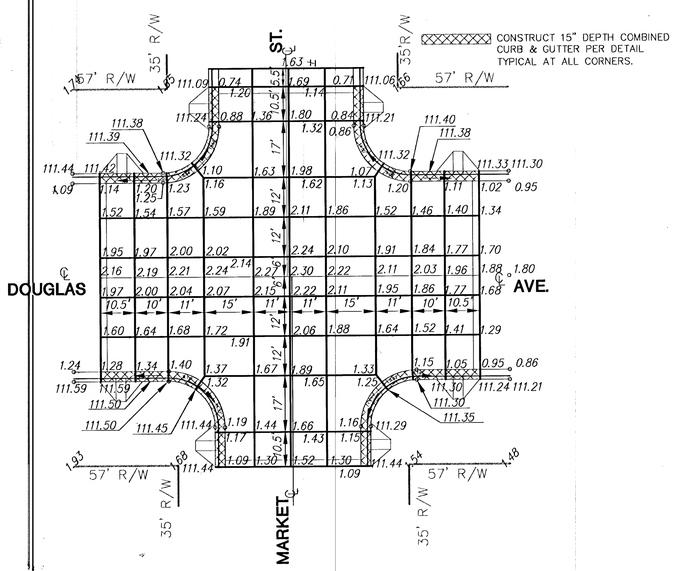

DOUGLAS ··· MARKET

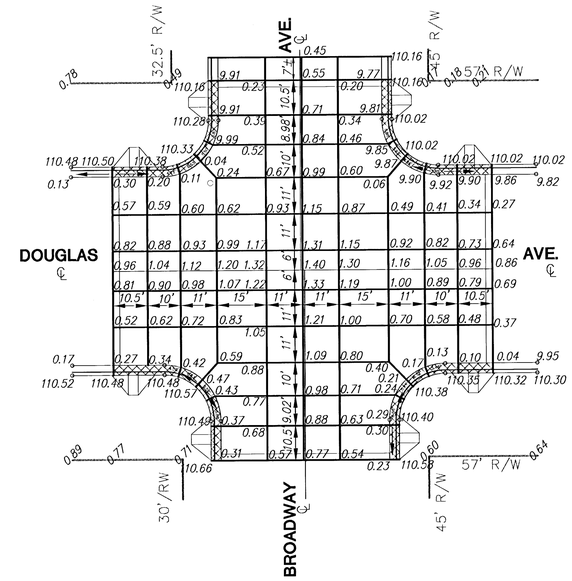

DOUGLAS ··· BROADWAY

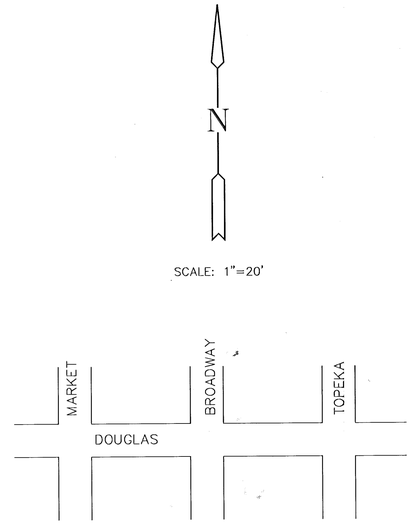

VICINITY MAP

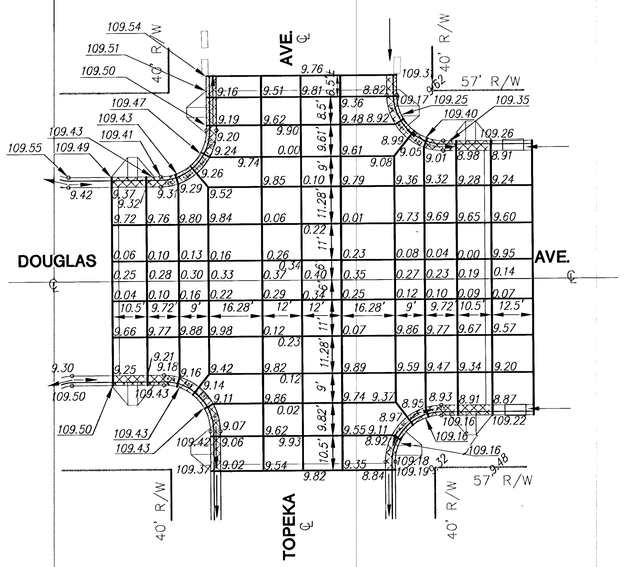

DOUGLAS ··· TOPEKA

NOTE: ALL CONCRETE REINFORCEMENT SHALL BE ADEQUATELY SUPPORTED BY BARCHAIRS @ 5' O.C. IN THE REQUIRED POSITION UNLESS APPROVED OTHERWISE BY THE ENGINEER.

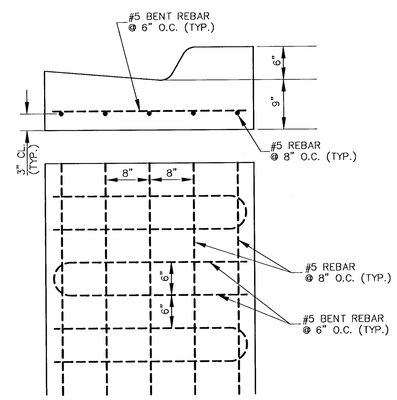

COMBINED CURB & GUTTER 15" DEPTH
(SEE SHT. 3 FOR DIMENSIONS)

NOTES:

1. UNLESS OTHERWISE SHOWN, ALL JOINTS ARE CONSTRUCTED IN THE CONCRETE SLAB AND AS LONGITUDINAL JOINTS PER TYPICAL DETAILS.
2. JOINT ELEVATIONS ARE TO TOP OF FINISHED PAVEMENT. ELEVATION TO TOP OF CONCRETE SLAB NEEDS ADJUSTMENT TO ALLOW FOR BEDDING AND PAVERS.
3. FOR LAYOUT DIMENSIONS, SEE PAVING PLAN AND LS SERIES PLANS.
4. CONSTRUCT 5 FOOT TRANSITIONS AS REQUIRED TO MATCH NEW TO EXISTING CURBS.
5. CURB ELEVATIONS SHOWN ARE HIGH EDGE (0.00) AND TOP OF CURB ELEVATIONS ARE (000.00).

REVISED 4/99

MID-KANSAS ENGINEERING CONSULTANTS, INC.
411 N. WEBB ROAD
WICHITA, KS. 67206
316-684-9600

PROJECT NAME: STREETSCAPES

SHEET TITLE: JOINT PLAN FOR MARKET STREET, BROADWAY AVENUE, AND TOPEKA AVENUE

DCH (DESIGN BY:)	SWM/MKEC (DRAWN BY:)	DCH (CHECKED BY:)
OCT 1995 (DATE)	92010 (JOB NO.)	4 / 61 (SHEET/OF)

G:\CIVIL\92010\92010GTN.DWG Tue May 11 15:28:16 1999