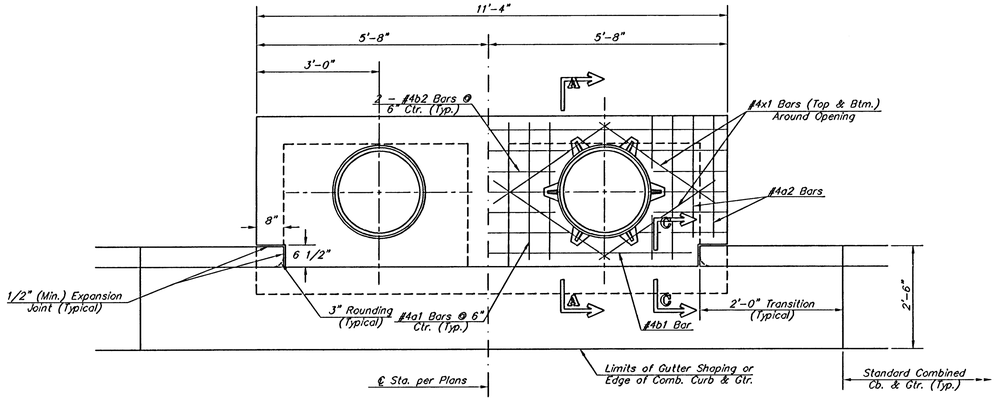

PLAN

*Left Side Shown Without Slab Reinforcing, Right Side Shown With Slab Reinforcing

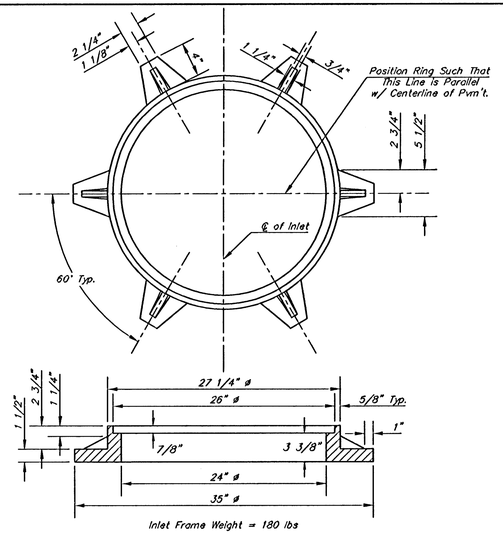

Inlet Frame Weight = 180 lbs

MANHOLE RING AND COVER

*See City of Wichita Standard Manhole Ring and Cover Detail Sheet for Cover Details to Be Used With Inlet Frame.

PRECAST SLAB AND FLOOR REINFORCING											
		W = 4'-4"		W = 5'-4"		W = 6'-4"		W = 7'-4"		W = 8'-4"	
MARK	SIZE	NO.	LENGTH	NO.	LENGTH	NO.	LENGTH	NO.	LENGTH	NO.	LENGTH
a1	#4	13	6'-7"	1[illegible]	8'-7"	13	10'-7"	13	12'-7"	13	14'-7"
* a2	#4	4	6'-0"	4	8'-0"	4	10'-0"	4	12'-0"	4	14'-0"
a3	#4	23	4'-1"	2[illegible]	5'-1"	23	6'-1"	23	7'-1	23	8'-1"
b1	#4	1	9'-9"	1	9'-9"	1	9'-9"	1	9'-9"	1	9'-9"
* b2	#4	23	11'-1"	2[illegible]	11'-1"	35	11'-1"	41	11'-1"	47	11'-1"
x1	#4	16	3'-10"	1[illegible]	4'-2"	16	4'-6"	16	4'-10"	16	5'-2"

WALL REINFORCING											
		W = 4'-4"		W = 5'-4"		W = 6'-4"		W = 7'-4"		W = 8'-4"	
MARK	SIZE	NO.	LENGTH	NO.	LENGTH	NO.	LENGTH	NO.	LENGTH	NO.	LENGTH
w1	#4	①	11'-1"	①	11'-1"	①	11'-1"	①	11'-1"	①	11'-1"
w2	#4	①	4'-1"	①	5'-1"	①	6'-1"	①	7'-1"	①	8'-1"
w3	#4	52	②	5[illegible]	②	60	②	64	②	68	②

* Field Bend or Cut Reinforcing as Require[illegible] for Clearance.

① 4 (H) - 12") (H) - 21") Rounded do[illegible] to nearest 0.5'

② H) - 3"

STANDARD CURB INLET PRECAST TOPS				
W	PRE-CAST TOP SIZE	PIPE SIZE	CU. YD. CONC.
3'-0"	3'-8" x 11'-4" x 7 1/2"	21" & SMALLER	0.83±
4'-0"	4'-8" x 11'-4" x 7 1/2"	24" & 30"	1.09±
5'-0"	5'-8" x 11'-4" x 7 1/2"	36" & 42"	1.35±
6'-0"	6'-8" x 11'-4" x 7 1/2"	48" & 54"	1.61±
7'-0"	7'-8" x 11'-4" x 7 1/2"	60" & 66"	1.87±

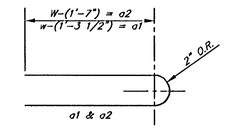

BENDING DIAGRAM

GENERAL NOTES:

Concrete shall be C.O.W. standard paving mix. All exposed edges shall be finished with an edging tool. Reinforcing bars shall be field bent or cut to clear pipes and inlet rings. All bars are #4 bars @ 6" spacing and shall have a minimum clearance of 1 1/2" unless otherwise noted. Floors of inlet shall be shaped with 8 sack sand mix concrete to increase hydraulic efficiency such that the inlet will be self cleaning between all inlet and/or outlet pipe(s). The contractor will be required to to construct 8" brick masonry walls between the inlet base and top on this inlet when H=7'-0" or less and W=6'-4" or less. When W is greater than 6'-4" and H is less than 7'-0", the outside inlet walls below the brick stack shall be reinforced concrete construction.

Concrete tops to be installed on thin mortar cushion to insure full support along brick walls. Concrete tops may be cast in place or precast.

The ends of all pipes installed in inlets shall be cut off flush with the inside face of the inlet wall.

This detail is identical to the standard detail drawing except that the gutter transition length is increased from 2'-0" to 3'-6".

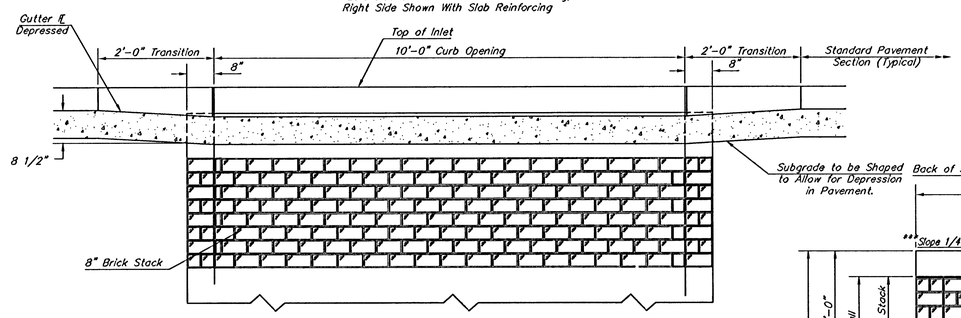

ELEVATION

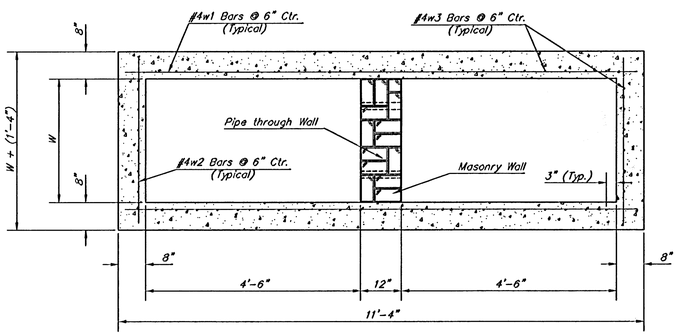

SECTION B-B

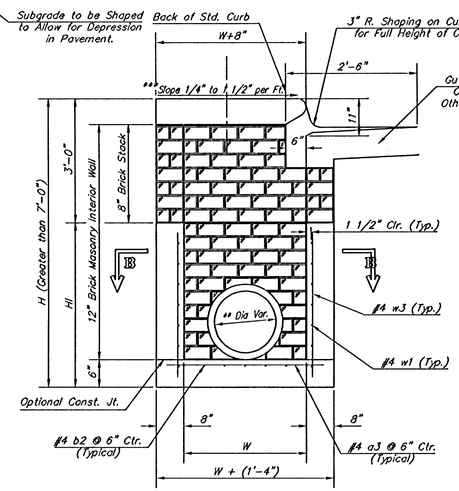

TYPICAL INLET SECTION AT CENTER WALL (REINFORCED CONCRETE WALLS)

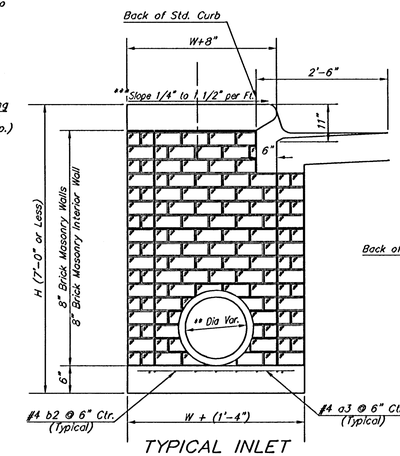

TYPICAL INLET SECTION AT CENTER WALL (MASONRY WALLS)

NOTES:

** A center wall opening shall be provided by means of a section of reinforced concrete pipe. See Case I and Case II below.

*** Slope of inlet tops to match sidewalk of parking slopes within limits indictated

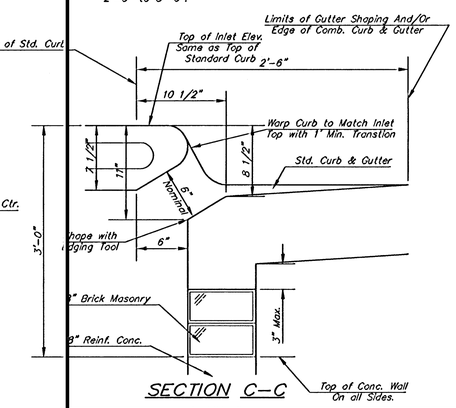

SECTION C-C

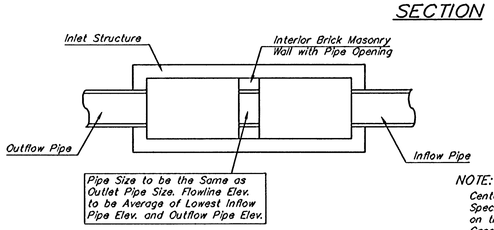

CASE I

NOTE:

Center Wall Pipe Size shall be as Specified in Inlet Construction Notes on the Plan/Profile Sheets for those Cases not Shown Here.

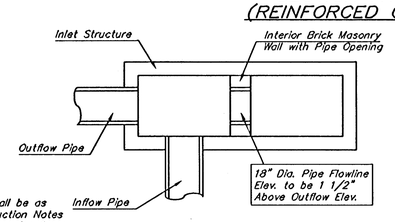

CASE II

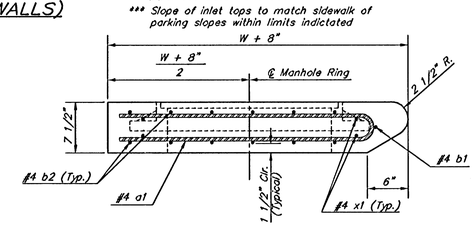

SECTION A-A

THE CITY OF WICHITA

CITY ENGINEER'S OFFICE
CITY HALL - SEVENTH FLOOR
455 NORTH MAIN STREET
WICHITA, KANSAS 67202
(316) 268-4501
(316) 268-4114 FAX

STANDARD TYPE 1 CURB INLET OPENING = 6" x 10'-0"

JAMES L. ARMOUR, P.E. - ACTING CITY ENGINEER

PROJECT NUMBER	OCA NO.
472-84206	765935
DATE MAR 96	SHEET 12 OF 28

Saved 05-24-2006 8:08:48 AM by BJS
Plot Scale 1:1 06-01-2006 6:41:41 AM by BJS
A:\sheets\4084sht.dwg