

DEETER #2433 GRATE

600 x 600 Frame and Grate Detail

NOTE: Grates shell be imprinted on the top surface with "CITY OF WICHITA" using letters at least 25 mm in height. Other marking methods may be approved by the engineer.

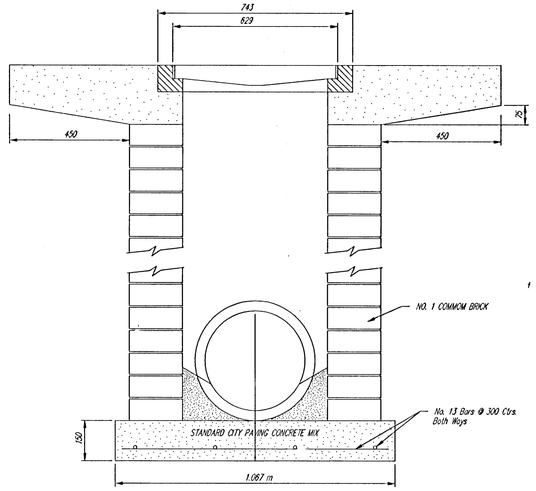

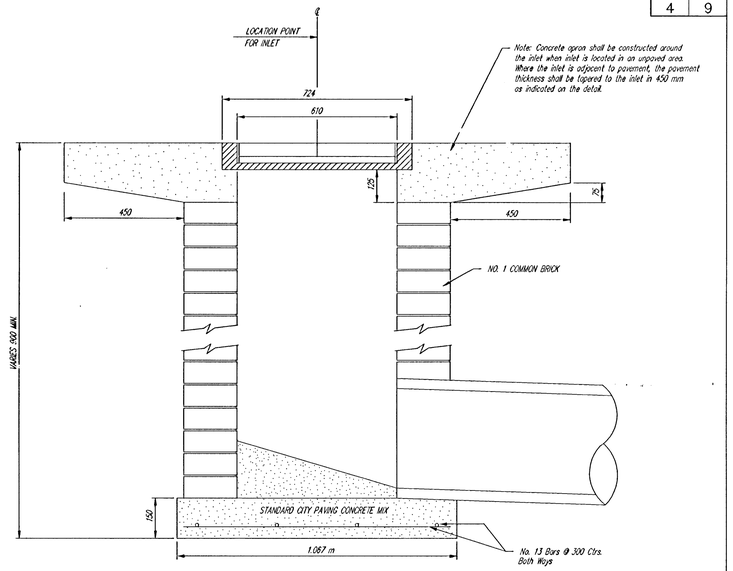

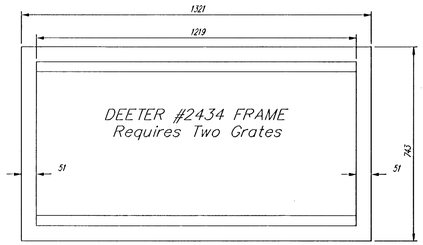

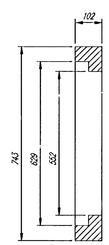

Double 600 x 600 Frame Detail

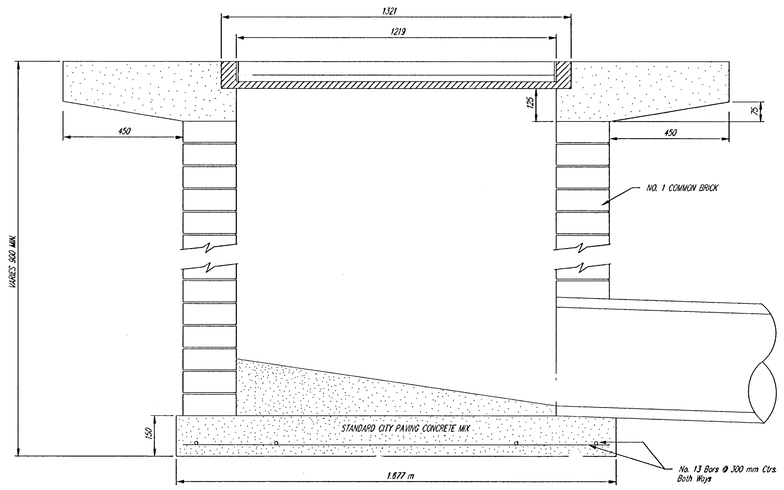

THE CITY OF WICHITA

C. Y ENGINEER'S OFFICE
CITY HALL – SEVENTH FLOOR
455 NORTH MAIN STREET
WICHITA, KANSAS 67202
(316) 268-4501
(316) 268-4114 FAX

DROP INLET
600 X 600 & 600 X 1200

M. E. LINDEBAK P.E. – CITY ENGINEER

PROJECT NUMBER	INDEX CODE
54-87 K8258-07	XXXXXX
DATE: 2004	SHEET 4 OF 9

J:\00011ph2\BONNIE B-HEATHER PROJ\04 DROP INLET.dwg 5/17/2005 3:54:23 PM CDT