# SERVICE BOX CONSTRUCTION/INSTALLATION DETAILS

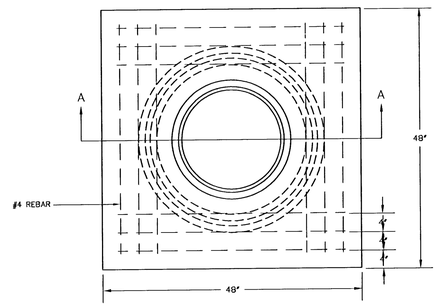


PRE-CAST CONCRETE SERVICE BOX

(36" I.D. X 54" RCP) with 6" CAP

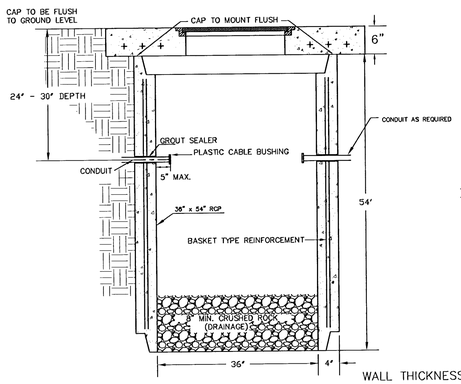


SECTION A-A

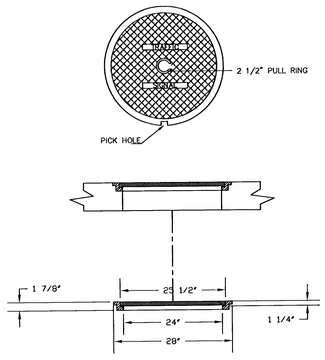


RING & COVER DETAIL

# CONDUIT/DETECTOR WIRE INSTALLATION DETAILS

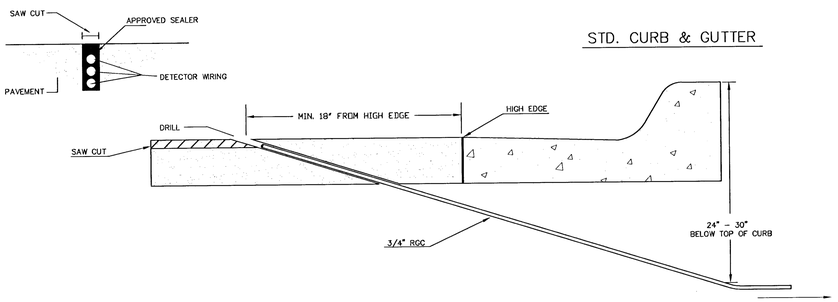


STD. CURB & GUTTER

# 170 CONTROLLER PAD DETAILS

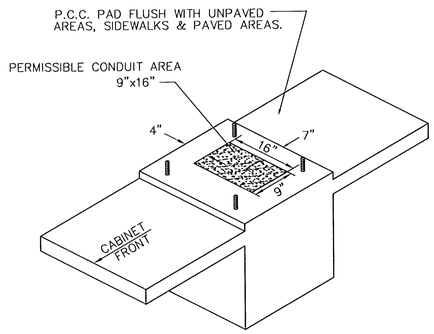


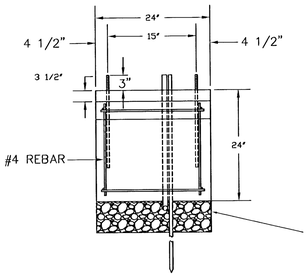


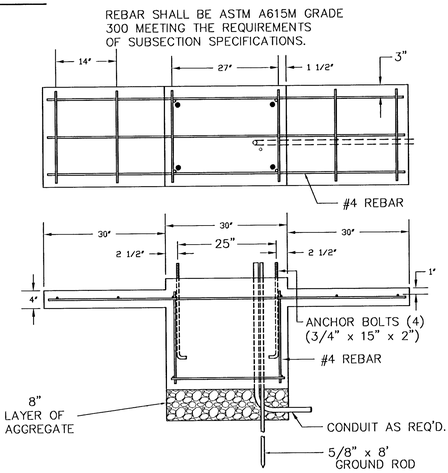


# JUNCTION BOX DETAILS

PRE-FAB Junction Box

(24" I.D. X 36" R.C.P.)

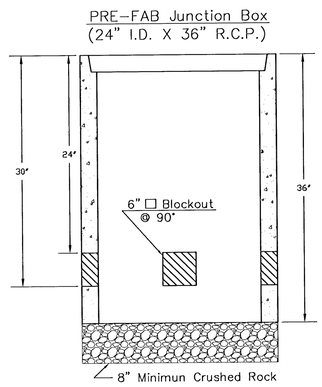


SECTION A-A

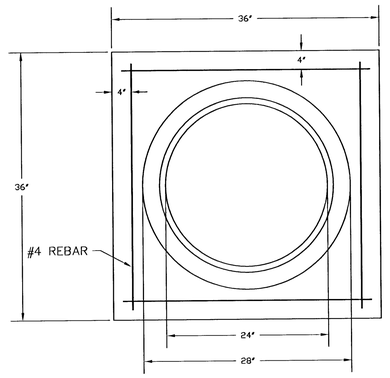


JUNCTION BOX CAP

36" x 36" x 6"

TOP OF CAP TO BE FLUSH WITH GROUND LEVEL.

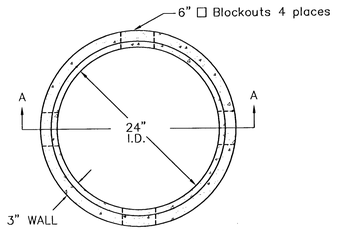


"SEE SERVICE BOX INSTALLATION FOR RING & COVER DETAILS.

# NOTES:

SERVICE & JUNCTION BOX:

1. CONDUIT CONNECTION TO BE FLUSH TO WITHIN 5" OF INSIDE FACE OF SIDE WALL, CONDUIT TO DRAIN INTO SERVICE BOX.
2. CONDUIT CONNECTIONS TO SERVICE BOX SHALL BE TERMINATED WITH PLASTIC CABLE BUSHING.
3. CONDUIT SHALL BE SEALED WITH APPROVED SEALER AT INSIDE WALL FACE.
4. ALL SERVICE & JUNCTION BOXES TO HAVE 8" OF CRUSHED ROCK.

TRENCHING:

1. DEPTH TO BE 30" MINIMUM WITH ROCK & STUBBLE FREE BACKFILL TO SERVE AS BEDDING MATERIAL. MAINTAIN MINIMUM CONDUIT DEPTH IN TRENCH.
2. BACKFILL TO BE COMPACTED IN 6" LOOSE LIFTS BY HAND OR MECHANICAL TAMPING TO A 95% STANDARD DENSITY.

CONDUIT:

1. SLOPE CONDUIT TO DRAIN AS DIRECTED BY THE ENGINEER.
2. 3" RIGID STEEL CONDUIT BTWN. SERVICE BOXES.
   1 1/4" " " " BTWN. SERVICE & JUNCTION BOXES.
   3/4" " " " BTWN. JUNCTION BOXES.
   3/4" " " " BTWN. JUNCTION BOX & DETECTOR LOOP SAW CUT

| REV. DATE | COMMENTS | INT |
|---|---|---|
| | | |

THE CITY OF WICHITA

CITY ENGINEER'S OFFICE
CITY HALL - SEVENTH FLOOR
455 NORTH MAIN STREET
WICHITA, KANSAS 67202
(316) 268-4507
(316) 268-4114 FAX

**SERVICE / JUNCTION BOX & CONTROLLER PAD CONSTRUCTION / INSTALLATION DETAILS**

M. E. LINDEBAK P.E. - CITY ENGINEER

PROJECT NUMBER 472-83261

OCA #

DATE APR 96