TRAFFIC CONTROL SIGNS & SIGN POSTS

STATION	LOCATION FROM ℄	R1-1	S-1	R2-1	R3-7R	R8-3a	①	②	W10-1	W1-7	SIGN POST LENGTH BREAKAWAY LENGTH 1 3/4" X 1 3/4" X VARIES	SIGN POST LENGTH "U" CHANNEL
0+95	LT.								1			8'
0+92	LT.									1		8'
TOTAL												

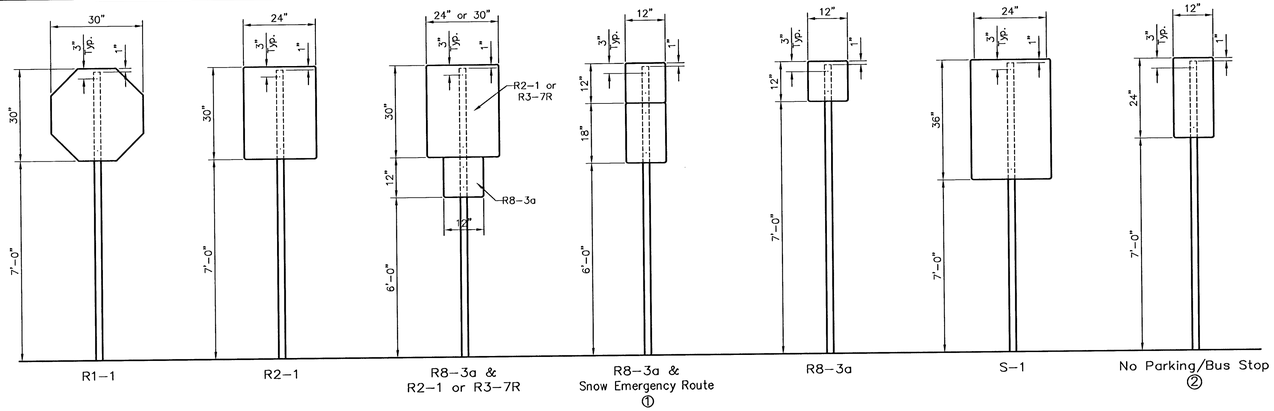

SIGN MOUNTING DETAILS

PAVEMENT INSTALLATION SEQUENCE

1. SIGN POST ANCHOR DRIVEN INTO SUBGRADE PRIOR TO THE PLACEMENT OF THE PAVEMENT.
2. ANCHOR SLEEVE DRIVEN INTO SUBGRADE OVER THE SIGN POST ANCHOR PRIOR TO THE PLACEMENT OF THE PAVEMENT
3. INSERT SIGN POST INTO THE SIGN POST ANCHOR AND BOLT IN PLACE.

GROUND INSTALLATION SEQUENCE

1. SIGN POST ANCHOR DRIVEN INTO GROUND
2. ANCHOR SLEEVE DRIVEN INTO THE GROUND OVER THE SIGN POST ANCHOR.
3. INSERT SIGN POST INTO THE SIGN POST ANCHOR AND BOLT IN PLACE.

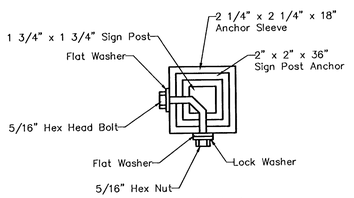

SECTION A-A

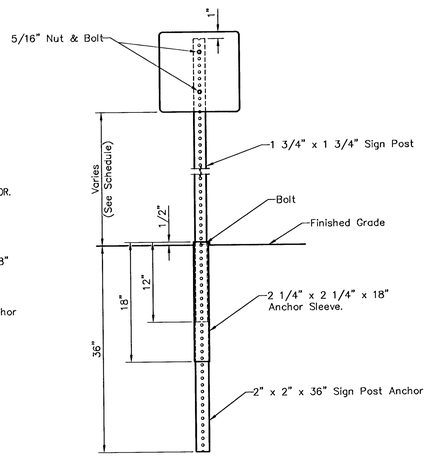

SIGN POST LENGTH SUMMARY

BREAKAWAY SIGN POST : 1 3/4" x 1 3/4" x VARIES

LENGTH	TOTAL # POSTS
2 1/4" x 2 1/4" x 18"	
2" x 2" x 36"	

U-CHANNEL

LENGTH	TOTAL # POSTS
STUBS 3'	3
POSTS 8'	3
POSTS 9'	
POSTS 9-1/2'	
POSTS 11'	
STRAPS & BOLTS	3

SIGN DESCRIPTION

CLASS.	TYPE	PROCESS	SIZE	AREA
R1-1	STOP SIGN	REV. SCREEN	30" X 30"	5.18 Sq. Ft.
R3-7R	RT. LANE MUST TURN RT.	DIR. SCREEN	30" X 30"	6.25 Sq. Ft.
R8-3a	NO PARKING	DIR. SCREEN	12" X 12"	1.00 Sq. Ft.
R2-1	SPEED LIMIT	DIR. SCREEN	24" X 30"	5.00 Sq. Ft.
①	SNOW EMERGENCY ROUTE	DIR. SCREEN	12" X 18"	1.50 Sq. Ft.
②	NO PARKING/BUS STOP	DIR. SCREEN	12" X 24"	2.00 Sq. Ft.
S-1	NO LT. TURN AT KELLOGG	DIR. SCREEN	24" X 36"	6.00 Sq. Ft.

RECAPITULATION OF MATERIALS

ITEMS	TOTAL	UNIT
SIGN FACE, HIGH INTENSITY HA (REFLECTIVE SHEETING)	3	S.F.
STEEL "U" CHANNEL SIGN POST	33	L.F.
BREAKAWAY SIGN POST, 1 3/4" x 1 3/4" x VARIES		L.F.
BREAKAWAY ANCHORSLEEVE, 2 1/4" x 2 1/4" x 18"		L.F.
BREAKAWAY SIGN POST ANCHOR, 2" x 2" x 36"		L.F.

RECAPITULATION OF MATERIALS

ITEMS	TOTAL	UNIT
SIGNING	LUMP SUM	L.S.

BREAK-AWAY SIGN POST DETAIL

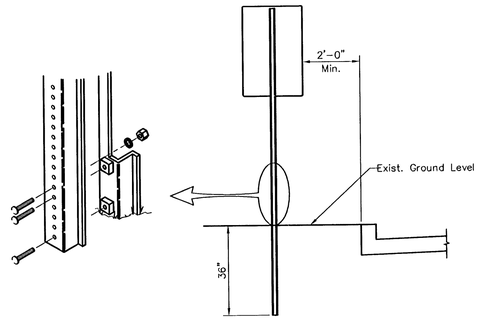

TRAFFIC SIGN INSTALLATION DETAIL

FOR SIGNS NOT GREATER THAN 12" WIDE

NOTES:

IN ALL INSTALLATIONS THE FIRST HOLE ABOVE THE FINISHED GRADE LEVEL IN ALL THREE UNITS MUST BE IN LINE FOR INSERTION OF THE BOLT.

ALL BOLTS AND NUTS FOR FASTENING THE SIGNS AND SIGN POST ASSEMBLY SHALL COMPLY WITH SECTION 1614 AND ALL WASHERS SHALL COMPLY WITH SECTION 1614 OF THE STANDARD SPECIFICATIONS FOR STATE ROAD AND BRIDGE CONSTRUCTION (1980 EDITION) AND SHALL BE SUBSIDIARY ITEM.

ALL LETTER, NUMBER & SYBOL SIZES, SPACING & COLORS AND SIGN COLORS SHALL CONFORM TO THE CURRENT "MANUAL ON UNIFORM TRAFFIC CONTROL DEVICES."

ALL SIGN MATERIALS TO BE 0.080" ALUMINUM.

THE CITY OF WICHITA

CITY ENGINEER'S OFFICE
CITY HALL - SEVENTH FLOOR
455 NORTH MAIN STREET
WICHITA, KANSAS 67202
(316) 268-4501
(316) 268-4114 FAX

SIGNING DETAILS

M. E. LINDEBAK P.E. - CITY ENGINEER

PROJECT NUMBER	OCA #
472-83261	
DATE MAR 96	SHEET 8 OF 10