SANITARY SEWER EXTENSION
LATERAL 474, S.W.I.
TO SERVE LEGACY 2ND ADDITION
PROJECT NO. 468-83321
OCA# 743888

GENERAL NOTES

1. Contractor will be required to notify Kansas One-Call (687-2470), a minimum of 48 hours in advance of beginning any excavation.

   The Contractor must notify the following utility companies in case of an emergency:

Cox Communications	262-0661
Kansas Gas Service	383-8600
KGE Electric	383-8600
Peoples Natural Gas Company	1-800-303-0357
Southwestern Bell Telephone Company	1-800-286-8313
City of Wichita Water Department	262-6000
City of Wichita Sewer Maintenance	262-6000

2. The Contractor shall give all property owners and/or tenants of developed property directly abutting the construction of this project a minimum of ten (10) days advance notice prior to start of construction.

3. The Contractor shall be responsible for preserving property irons. The Contractor will be required to re-establish any property irons which are damaged or destroyed by his construction operations. Such irons shall be re-established by a licensed land surveyor in accordance with state laws.

4. It shall be the responsibility of the Contractor to maintain sewage flow during construction of this project. The Contractor's plan for maintaining sewage flow shall be approved by the Engineer prior to construction.

5. The Contractor shall seed and fertilize all disturbed turf areas upon completion of construction (incidental to bid item for site clearing and restoration.

6. Easement areas are to be final graded as shown on sheet 4.

6. The Contractor shall install Phase 1 Soil Erosion Prevention measures prior to any disturbance of the site. See sheets 7-9.

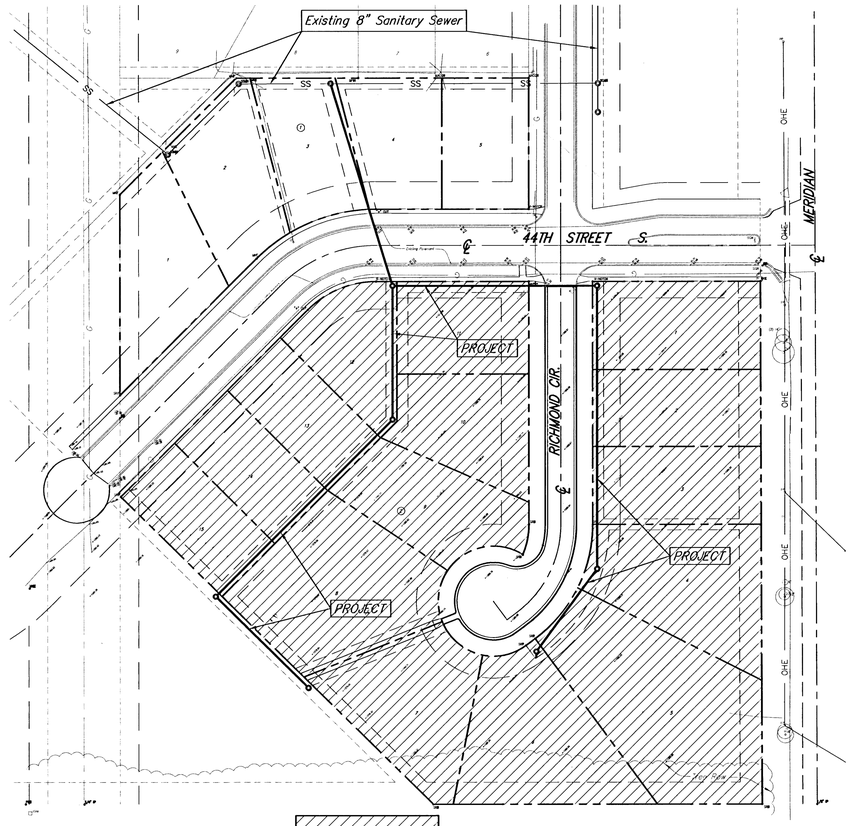

IMPROVEMENT DISTRICT

BENCH MARKS

City of Wichita Benchmark:
44' north and 30' east of 1/4 Sec. Cor. @ Meridian and 43rd St. South. Elev. 1280.80 (M.S.L.)

On-Site Bench Marks:
Square Cut, Top of south curb of 44th St. S. at the N.E. Cor. of Lot 1, Block 2, Legacy 2nd Addition. Elev. 1280.76 (M.S.L.)

Square Cut, Top of north curb 44th St. S. at the west line of Lot 1, Block 1, Legacy 2nd Addition. Elev. 1282.36 (M.S.L.)

INDEX OF SHEETS

1. COVER SHEET
2-4. PLAN/PROFILE
5. SHALLOW TYPE P MANHOLE DETAIL
6. EASEMENT GRADING PLAN
7. STORMWATER POLLUTION PREVENTION PLAN
8-9. BMP DETAILS
10. PLAT COPY

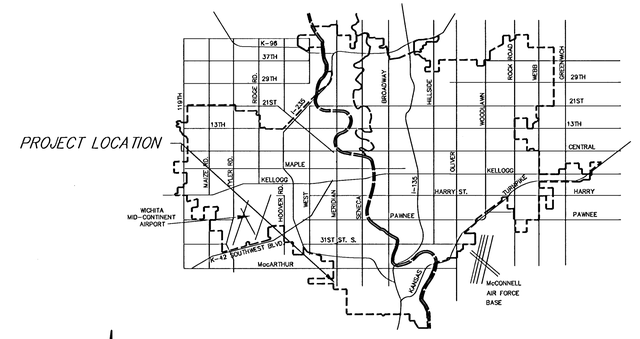

VICINITY MAP

Booked P-220
5/7/02
RDL

SRB

Scale: 1" = 60'

THOMAS CHARLES RUGGLES
LICENSED
9321
10-3-01
KANSAS
LAND SURVEYOR

CITY OF WICHITA, KANSAS
MICHAEL E. LINDEBAK, P.E. - CITY ENGINEER

SRB 924 NORTH MAIN WICHITA, KANSAS 67203 316-264-8008 FAX 264-4621
SAVOY, RUGGLES & BOHM, P. A.
ENGINEERING & SURVEYING

1952X

BASELINE STA. 0+00

BASELINE REAR LOT LINE BLOCK 2 EXTENDED

BASELINE STA. 1+85

BASELINE STA. 3+12.10

B.L. STA. 3+10.45, 4' RT.
STA. 3+13.87 LINE 1
CONSTRUCT STANDARD
TYPE P MANHOLE;
TOP ELEV. 1280.95

B.L. STA. 1+89.00, 4' RT.
STA. 1+92.42 LINE 1 = STA. 0+00 LINE 2.
CONSTRUCT STANDARD
TYPE P MANHOLE;
TOP ELEV. 1282.40

CAUTION: 4" GAS MAIN (KS. GAS SERVICE)

SAW, REMOVE AND REPLACE PAVEMENT AS NECESSARY.

B.L. STA. 0+05, 60.31' RT.
STA. 0+00 LINE 1
CONSTRUCT STANDARD
TYPE P MANHOLE OVER
EXISTING 8" SEWER;
TOP ELEV. 1282.59

S.E. Cor. Lot 8, Block 8, The Legacy Addition

LINE 1

44TH ST. S.

BUILDING SETBACK

℄ 10' UTILITY ESMT.

℄ 20' UTILITY EASEMENT

20' UTIL. ESMT.

EASEMENT

Existing Right-of-way

Water Main

8" Sanitary Sewer

S14°32'35"E 123.06'

S14°32'35"E 144.95'

N45°00'00"E 340.79'

S45°00'00"E 129'

N45°00'00"E 198'

N45°00'00"E 258'

S36°18'35"E 131.05'

S45°00'00"E 94.76'

N45°00'00"E 16.30'

N90°E 266.10'

107°1'2"

162°58'58"

90°0'0"

500°W 127.10'

43.10'

L=94.81'
Δ=45°00'00"
R=120.71'

68.89'

35.20'

35.83'

35.80'

68'

10'

SRB

SCALE
1" = 20' Horiz. (Plan)
1" = 5' Vert. (Profile)

STA. 0+00
CONSTRUCT STANDARD
TYPE P MANHOLE
TOP ELEV. 1282.90

TOP OF 12" WATER MAIN
TOP ELEV. 1277.2

STA. 1+92.42 LINE 1
CONSTRUCT STANDARD
TYPE P MANHOLE;
TOP ELEV. 1282.40

STA. 3+13.87 LINE 1
CONSTRUCT STANDARD
TYPE P MANHOLE;
TOP ELEV. 1282.60

4" GAS MAIN

Finish Grade

Existing ground

PLACE FLOWABLE FILL

192.42 L.F. 8" PVC PIPE @0.3%

121.45 L.F. 8" PVC PIPE @0.3%

FL. EXISTING 1273.79
FL. IN 1273.69

FL. OUT 1274.41
FL. IN 1274.51 (E)
FL. IN 1274.41 (S)

FL. OUT 1274.78
FL. IN 1274.68

0+00

1+92.42

3+13.87

1285
1280
1275
1270

LINE 1, LAT. 474 SWI
WICHITA, KANSAS

SRB
924 NORTH MAIN
WICHITA, KANSAS 67203
http://www.srb1.com
316-264-8008
FAX 264-4621
E-Mail: srb@srb1.com

SAVOY, RUGGLES & BOHM, P.A.
ENGINEERING & SURVEYING

PROJECT NUMBER 468-83321

DESIGN	DRAWN	UTILITY	REVIEW	DATE	REVISED
TCR	JTS	TCR		Oct. 3, 2001	Oct. 8, 2001

SHEET TITLE: SSBMAPLE

SRB JOB 1952X

SHEET 2 OF 10

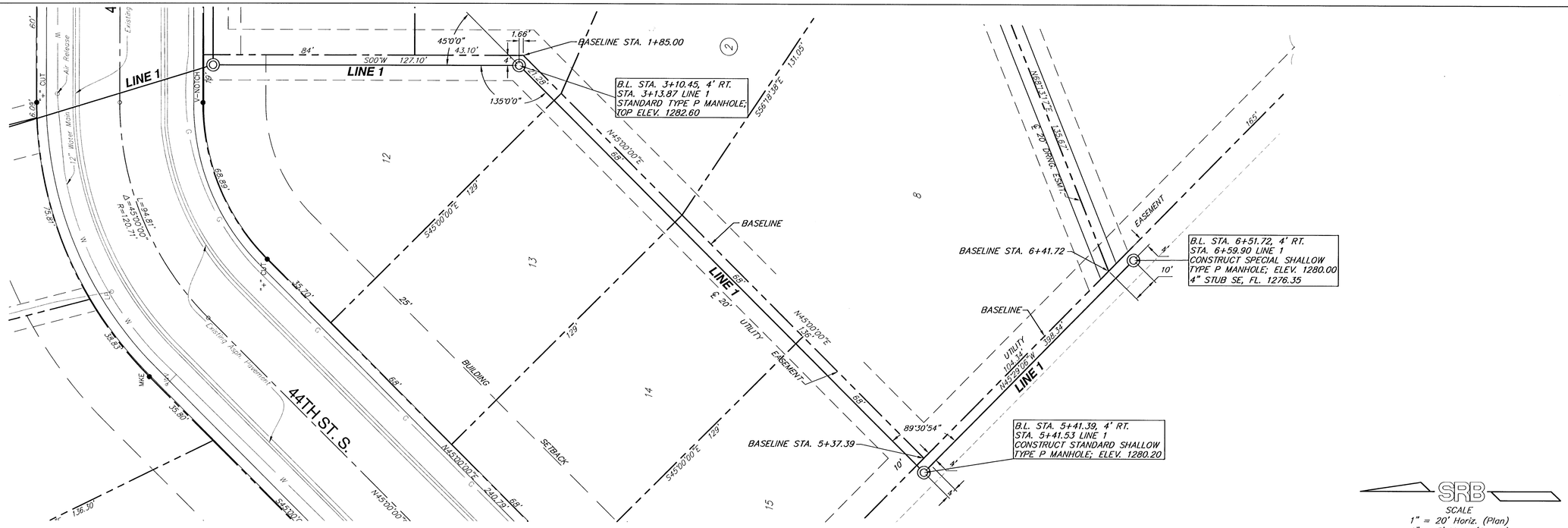

SRB

SCALE
1" = 20' Horiz. (Plan)
1" = 5' Vert. (Profile)

LINE 1, LAT. 474 SWI
WICHITA, KANSAS

SRB 924 NORTH MAIN WICHITA, KANSAS 67203 http://www.srb1.com
316-264-8008 FAX 264-4621 E-Mail: srb@srb1.com
SAVOY, RUGGLES & BOHM, P.A.
ENGINEERING & SURVEYING

PROJECT NUMBER 468-83321

DESIGN	DRAWN	UTM	REVIEW	DATE	REVISED
TCR	JTS	TCR		Oct. 3, 2001	.

DRAWING FILE: SSPROFILE2

SRB JOB 1822X

SHEET 3 OF 10

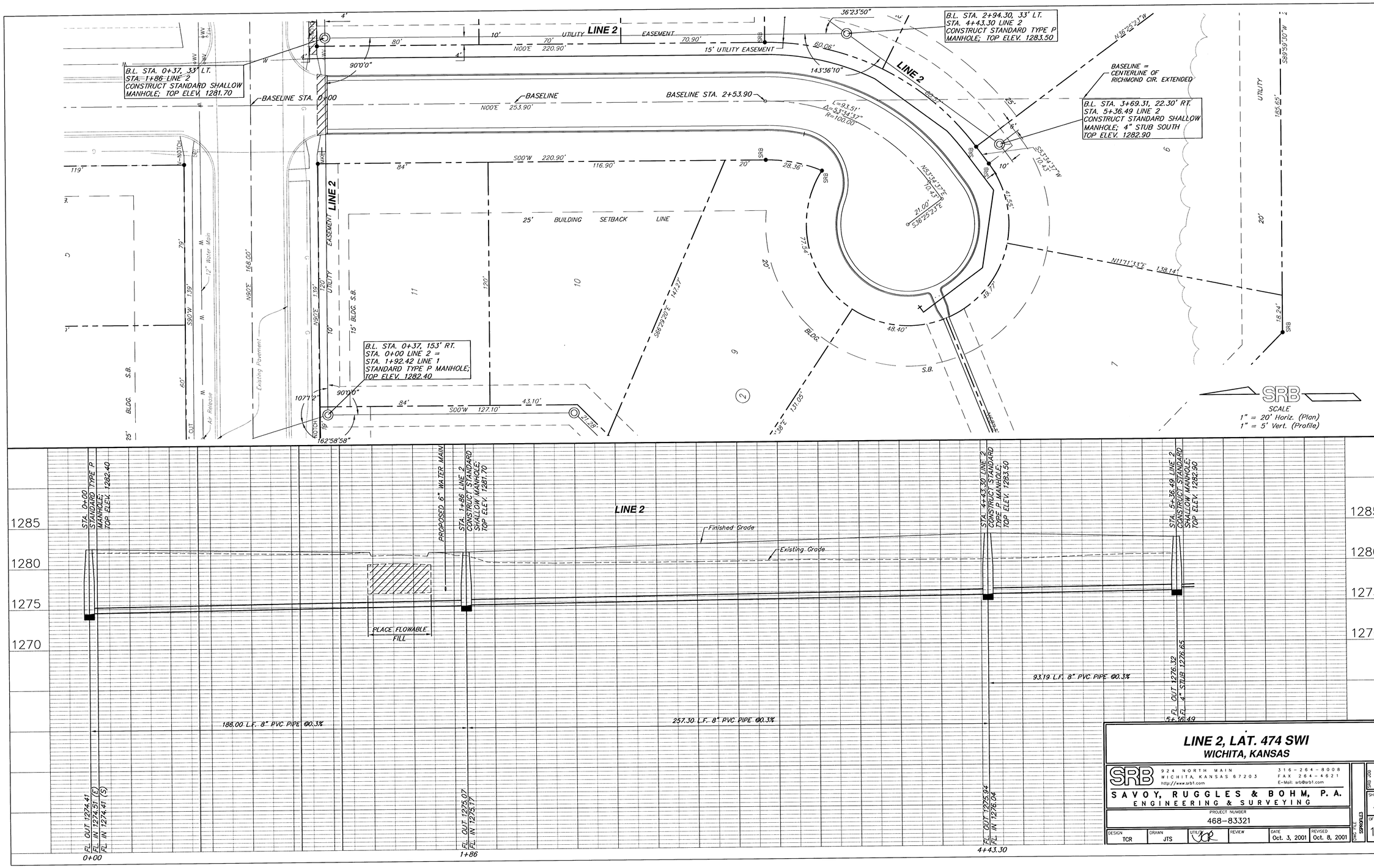

LINE 2, LAT. 474 SWI
WICHITA, KANSAS

SRB
924 NORTH MAIN
WICHITA, KANSAS 67203
http://www.srb1.com
316-264-8008
FAX 264-4621
E-Mail: srb@srb1.com

SAVOY, RUGGLES & BOHM, P.A.
ENGINEERING & SURVEYING

PROJECT NUMBER
468-83321

DESIGN	DRAWN	UTILITY	REVIEW	DATE	REVISED
TCR	JTS			Oct. 3, 2001	Oct. 8, 2001

DWG FILE SSPROFILE3

SRB JOB 1952X

SHEET 4 OF 10

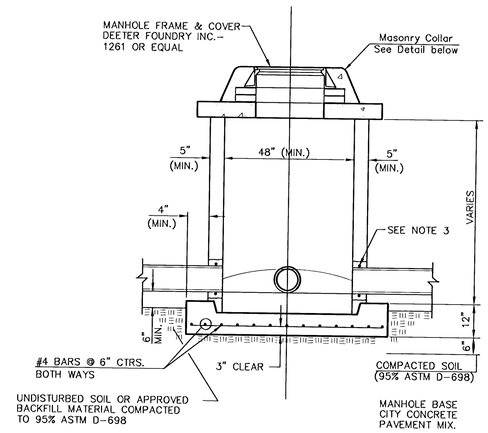

SHALLOW TYPE "P" MANHOLE

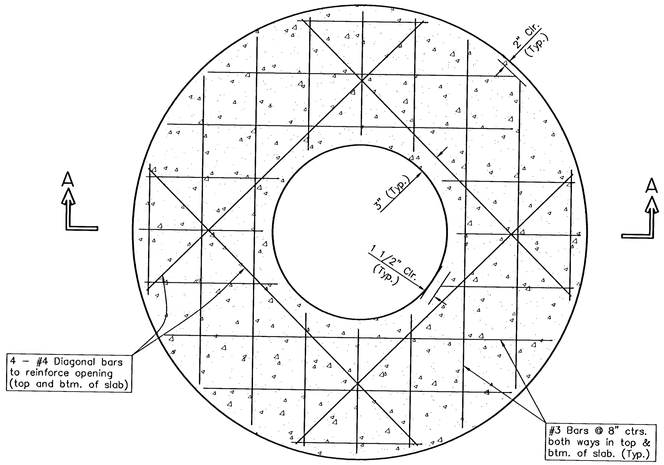

PLAN

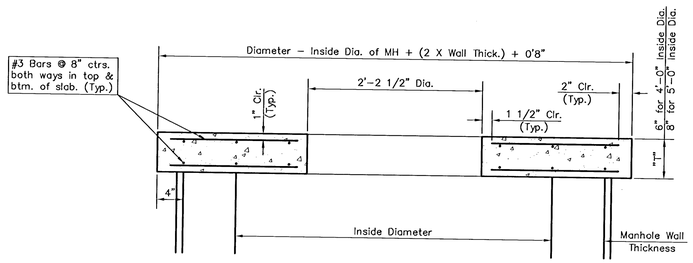

SECTION A-A

CONCRETE SLAB DETAILS

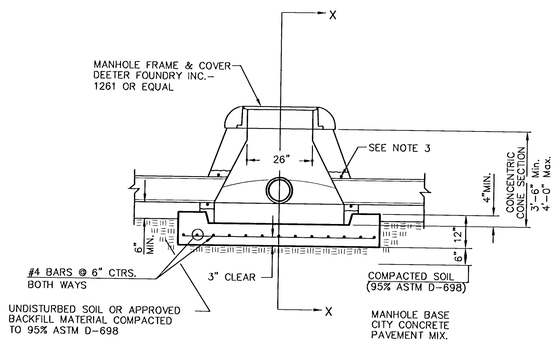

SPECIAL SHALLOW TYPE "P" MANHOLE

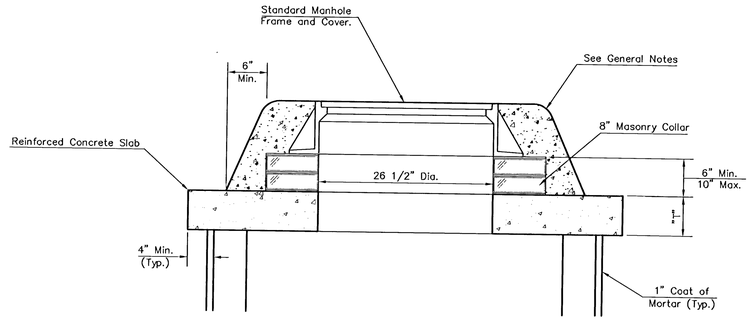

MASONRY COLLAR DETAIL

GENERAL NOTES

1. ALL PRECAST CONCRETE MANHOLE SECTIONS SHALL CONFORM TO THE LATEST REVISIONS OF A.S.T.M. C478 AS MODIFIED BY THE SPECIFICATIONS.
2. NON-SHRINK GROUT SHALL BE NON-METALLIC TYPE.
3. APPROVED FLEXIBLE WATERSTOP GASKETS SHALL BE INSTALLED TO JOIN THE SEWER TO THE MANHOLE WALL WHEN A.B.S. COMPOSITE PIPE OR P.V.C. PIPE IS USED. FOR OTHER TYPES OF PIPE THE SEWER SHALL BE GROUTED IN PLACE WITH NON-SHRINK GROUT. THE SEWER PIPE SHALL BE SUPPORTED WITH CONCRETE ENCASEMENT A MINIMUM OF 3 FEET FROM THE MANHOLE WALL AND TO THE FIRST JOINT FOR V.C.P. SUCH THAT THE JOINT REMAINS FLEXIBLE.
4. ALL INSIDE SURFACES OF THE CONCRETE MANHOLE WHICH WOULD BE EXPOSED TO SEWER GAS SHALL BE COATED WITH 2 COATS TNEMEC SERIES 66 HI-BUILD EPOXOLINE, DRY THICKNESS OF 8 MILS (MIN.)
5. EXTERIOR MANHOLE WALLS SHALL BE COATED WITH 1 COAT MOBILARMA 633 BITUMINOUS COATING.
6. JOINT SEALING COMPOUND SHALL BE KENT SEAL NO. 2 OR APPROVED EQUAL.
7. PRECAST MANHOLES SHALL BE SET AT LEAST 4 INCHES INTO THE MANHOLE BASE.
8. TOP OF MANHOLE FLOOR SLAB SHALL BE AT LEAST 3 INCHES BELOW THE FLOW LINE OF THE OUTLET PIPE TO INSURE SUFFICIENT MINIMUM THICKNESS OF SHAPED INVERT.
9. LIFTING HOLES SHALL BE FILLED WITH NON-SHRINK GROUT AND THE INTERIOR SURFACE COATED AS SPECIFIED.
10. MORTAR USED IN MASONRY CONSTRUCTION SHALL CONTAIN 8 SACKS OF CEMENT PER CUBIC YARD. CONCRETE USED IN MANHOLE BASES SHALL CONFORM TO THE REQUIREMENTS OF CONCRETE FOR CONCRETE PAVEMENT CONSTRUCTION AS SPECIFIED IN THE CITY STANDARD PAVING SPECIFICATIONS USING CITY CONCRETE PAVEMENT MIX WITHOUT AIR ENTRAINING ADMIXTURE. MORTAR SHALL BE PLACED AROUND THE MANHOLE RING AS SHOWN ON THE DRAWINGS WHEN MANHOLES ARE CONSTRUCTED IN UNPAVED AREAS. MANHOLES CONSTRUCTED WHERE PIPE SIZES ARE SMALLER THAN 24" SHALL HAVE AN INSIDE DIAMETER OF 4'. MANHOLES CONSTRUCTED WHERE PIPE SIZES ARE 24" OR LARGER SHALL HAVE AN INSIDE DIAMETER OF 5'. COMPLETED MANHOLE SHALL BE WITHOUT LEAKS AND WATER TIGHT.
11. REINFORCING STEEL SHALL BE INSTALLED IN THE MANHOLE BASES AND SHALL CONSIST OF NO. 4 BARS PLACED ON 6" CENTERS IN BOTH DIRECTIONS. THE MANHOLE BASE REINFORCEMENT SHALL BE PLACED AT LEAST 3" ABOVE THE BOTTOM OF THE MANHOLE BASE. ALL COSTS FOR FURNISHING AND INSTALLING REINFORCING STEEL SHALL BE INCLUDED IN THE UNIT PRICE BID FOR THE MANHOLE.
12. THE FLOORS OF ALL MANHOLES SHALL BE SHAPED WITH FLOW CHANNELS SUCH THAT THE MANHOLES WILL BE SELF CLEANING AND FREE OF AREAS WHERE SOLIDS COULD BE DEPOSITED AS SEWAGE FLOWS THROUGH THE MANHOLE FROM ALL INLET PIPES TO THE OUTLET PIPE. FLOW CHANNELS SHALL BE FORMED TO MATCH THE BOTTOM HALVES OF THE INFLOWING PIPES AND THE OUTFLOWING PIPE AS SHOWN BY THE DRAWINGS EXCEPT FOR INSIDE DROP MANHOLES. FLOW CHANNELS FOR INSIDE DROP MANHOLES SHALL BE CONSTRUCTED AS INDICATED BY THE DRAWING. MANHOLE FLOORS SHALL HAVE SLOPES OF 3 INCHES PER FOOT IN THE AREAS OUTSIDE OF THE FLOW CHANNELS SLOPED TOWARD THE FLOW CHANNELS. PIPES LAID THROUGH MANHOLES SHALL HAVE THE TOP HALF REMOVED TO NEAT LINES FOR THE FULL INSIDE DIAMETER OF THE MANHOLE. MANHOLE FLOORS SHALL THEN BE SHAPED AROUND THE BOTTOM HALF OF THE PIPE WHICH FORMS THE FLOW CHANNEL.
13. PIPES INSTALLED WITHIN THE EXCAVATION MADE FOR THE MANHOLE SHALL BE CRADLED WITH CONCRETE TO THE LIMITS OF THE MANHOLE EXCAVATION. WHEN CLAY PIPE IS USED, THE CRADLE SHALL EXTEND TO THE FIRST JOINT OUTSIDE THE MANHOLE. THE CRADLE SHALL BE TERMINATED AT THE CLAY PIPE JOINT IN A MANNER WHICH WILL MAINTAIN THE FLEXIBILITY OF THE JOINT. COST OF CRADLE WITHIN MANHOLE EXCAVATION OR TO CLAY PIPE JOINTS ADJACENT TO MANHOLE SHALL BE INCLUDED IN THE UNIT PRICE BID FOR THE MANHOLE.
14. MANHOLE COVER CASTINGS AND MANHOLE FRAME CASTINGS SHALL CONFORM TO THE REQUIREMENTS AS INDICATED IN THE STANDARD SPECIFICATIONS AND AS SHOWN IN THE STANDARD DETAIL DRAWING.
15. ALL BRICK USED IN MANHOLE CONSTRUCTION SHALL MEET GRADE SW OF ASTM C652 OR C62-87.

SHALLOW TYPE 'P' MANHOLE DETAILS
WICHITA, KANSAS

SRB
924 NORTH MAIN
WICHITA, KANSAS 67203
316-264-8008
FAX 264-4621
www.srb1.com
E-mail: srb@srb1.com
SAVOY, RUGGLES & BOHM, P. A.
ENGINEERING & SURVEYING

PROJECT NUMBER 468-83321

DESIGN	DRAWN	UTILITY	REVIEW	DATE	REVISED
.	.	.	.	.	.

DWG TITLE (SRB)Shallow Type P Manhole
SRB JOB 19624
SHEET 5
OF 10

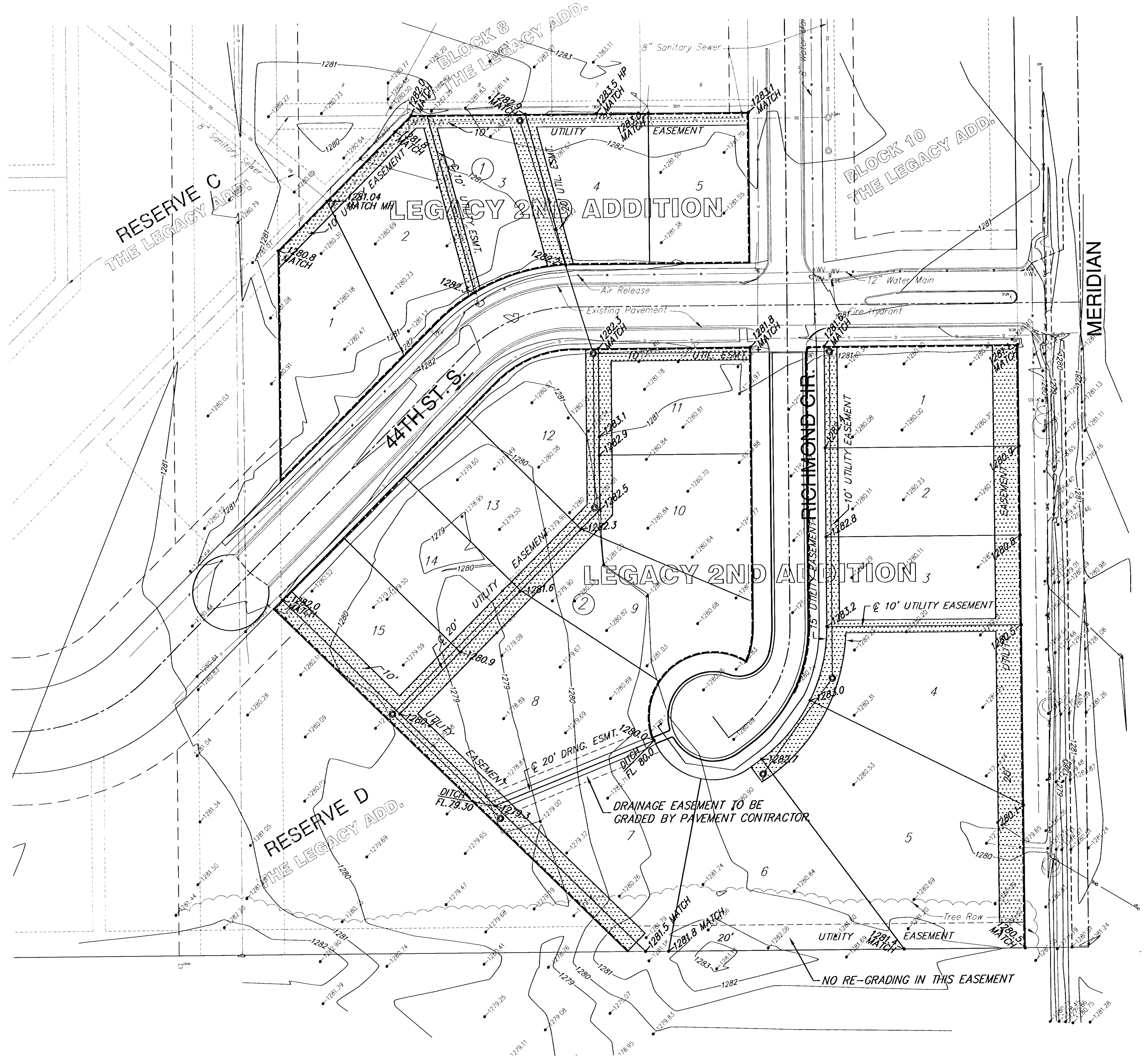

SCALE 1" = 50'

City of Wichita Benchmark:
44' north and 30' east of 1/4 Sec. Cor. @ Meridian and 43rd St. South. Elev. 1280.80 (M.S.L.)

On-Site Bench Marks:
Square Cut, Top of south curb of 44th St. S. at the N.E. Cor. of Lot 1, Block 2, Legacy 2nd Addition. Elev. 1280.76 (M.S.L.)

Square Cut, Top of north curb 44th St. S. at the west line of Lot 1, Block 1, Legacy 2nd Addition. Elev. 1282.36 (M.S.L.)

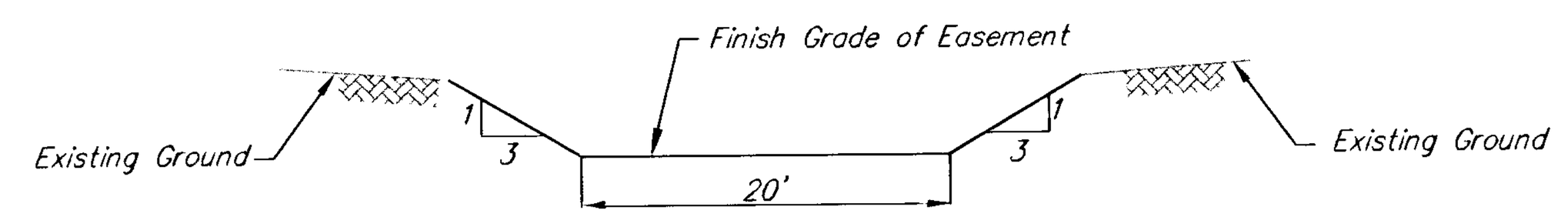

EASEMENT GRADING CUT SECTION

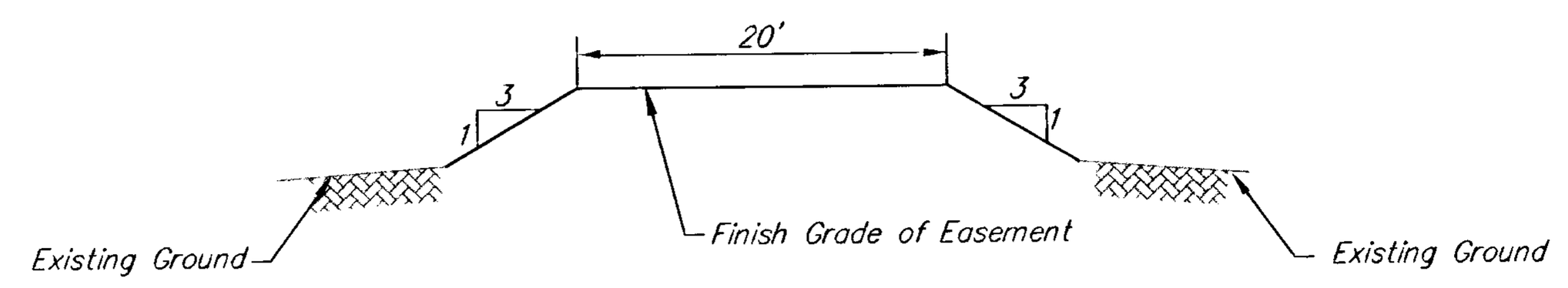

EASEMENT GRADING FILL SECTION

LEGEND:

SILT FENCE --------

ESTIMATED EARTHWORK:

EXCAVATION: 12 C.Y.
FILL: 2049 C.Y.
CONTRACTOR FURNISHED BORROW: 2240 C.Y.

LEGACY 2ND ADDITION

EASEMENT GRADING PLAN

WICHITA, KANSAS

SRB 924 NORTH MAIN WICHITA, KANSAS 67203 www.srb1.com 316-264-8008 FAX 264-4621 E-mail: srb@srb1.com

SAVOY, RUGGLES & BOHM, P.A.
ENGINEERING & SURVEYING

PROJECT NUMBER 468-83321

DESIGN	DRAWN	UTILITY	REVIEW	DATE	REVISED	DWG FILE	SRB JOB	SHEET	OF
TCR	JTS	JCK		Oct. 3, 2001	.	Easement Grading	1952X	6	10

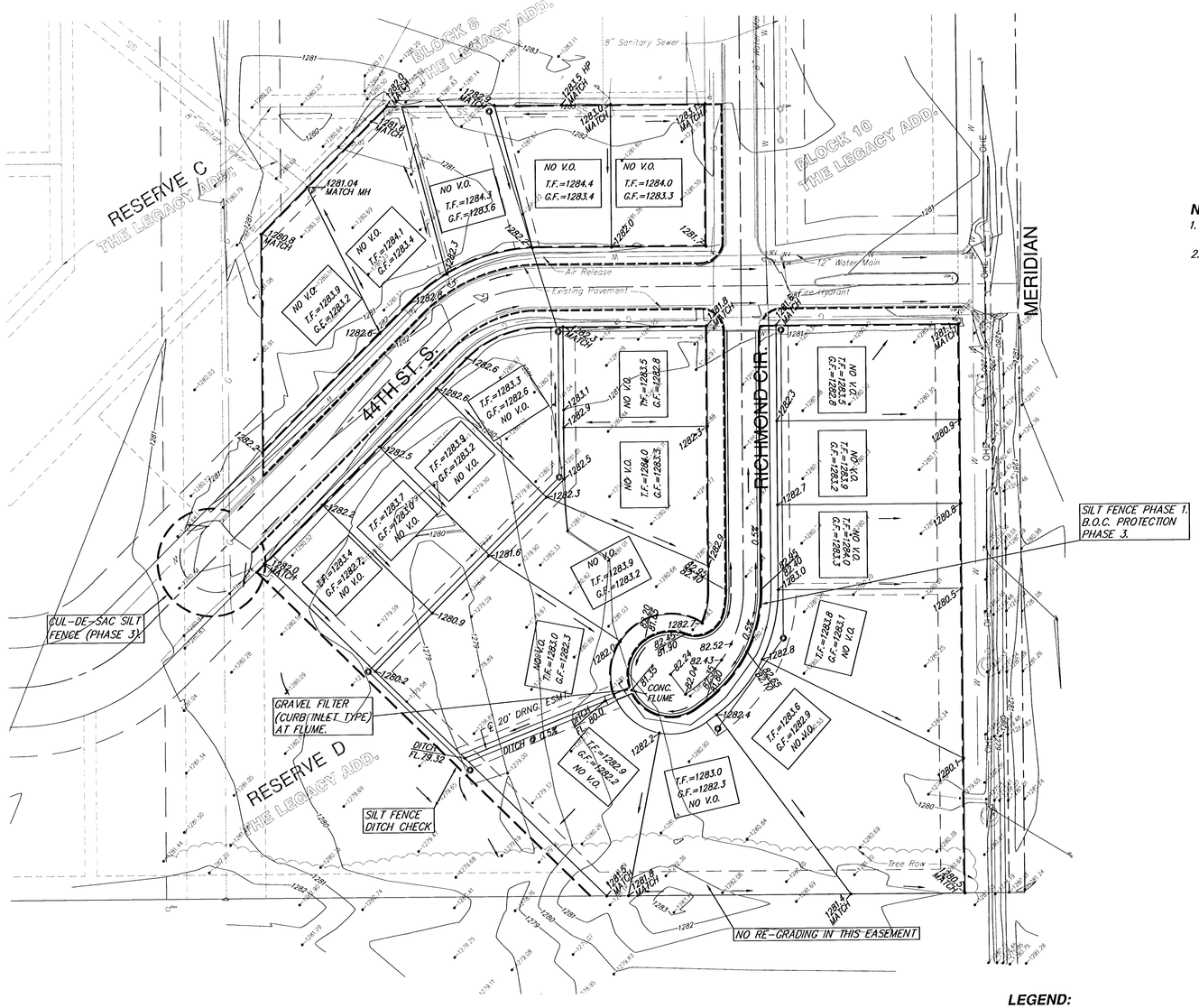
RESERVE C
THE LEGACY ADD.
BLOCK 8
THE LEGACY ADD.
BLOCK 10
THE LEGACY ADD.
RESERVE D
THE LEGACY ADD.
44TH ST. S.
RICHMOND CIR.
MERIDIAN
8" Sanitary Sewer
12" Water Main
Air Release
Existing Pavement
Fire Hydrant
Tree Row
OHE
1281.04 MATCH MH
NO V.O. T.F.=1284.4 G.F.=1283.4
NO V.O. T.F.=1284.0 G.F.=1283.3
NO V.O. T.F.=1284.3 G.F.=1283.6
NO V.O. T.F.=1284.1 G.F.=1283.4
NO V.O. T.F.=1283.9 G.F.=1283.2
T.F.=1283.3 G.F.=1282.6 NO V.O.
NO V.O. T.F.=1283.5 G.F.=1282.8
NO V.O. T.F.=1284.0 G.F.=1283.3
T.F.=1283.9 G.F.=1283.2 NO V.O.
T.F.=1283.7 G.F.=1282.9 NO V.O.
NO V.O. T.F.=1283.9 G.F.=1283.2
NO V.O. T.F.=1283.0 G.F.=1282.1
T.F.=1283.8 G.F.=1282.1 NO V.O.
T.F.=1283.6 G.F.=1282.9 NO V.O.
T.F.=1282.9 G.F.=1282.2 NO V.O.
T.F.=1283.0 G.F.=1282.3 NO V.O.
T.F.=1283.0 G.F.=1282.1 NO V.O.
T.F.=1283.5 G.F.=1282.8
T.F.=1283.5 G.F.=1283.2
T.F.=1283.5 G.F.=1282.8
T.F.=1283.0 G.F.=1282.1 NO V.O.
T.F.=1283.8 G.F.=1282.1 NO V.O.
1281.8 MATCH
1282.0 MATCH
1282.9 MATCH
1283.5 HP MATCH
1283.0 MATCH
1283.4 MATCH
1280.8 MATCH
1281.8 MATCH
1281.4 MATCH
1280.2 MATCH
1280.2 MATCH
1284.4 MATCH
1280.8 MATCH
1280.2 MATCH
1280.8 MATCH
1280.2 MATCH
1280.2 MATCH
1280.2

PHASE 1 – INITIAL EARTHWORK AND UTILITIES (EXCEPT STORM SEWER)

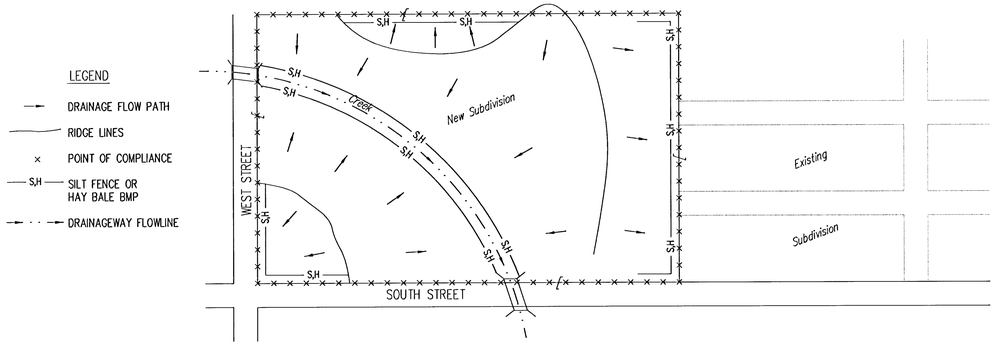

1. DURING THIS PHASE OF SUBDIVISION CONSTRUCTION, THE POINTS OF COMPLIANCE ARE THE PERIMETER BOUNDARIES AND ANY DRAINAGE WAYS OR STORM SEWERS DRAINING THROUGH OR FROM THE SITE. SHOULD LAKES BE CONSTRUCTED WITHIN THE SUBDIVISION THAT WILL DISCHARGE DURING STORMS, THEY ARE ALSO A POINT OF COMPLIANCE.
2. HAYBALES OR SILT FENCE MUST BE CONSTRUCTED ALONG THE PROPERTY LINE WHERE ON SITE WATER CAN DRAIN OFF THE PROPERTY. THESE BMP'S WILL ALSO BE INSTALLED ALONG ANY DRAINAGE DITCH OR LAKE THAT CAN DISCHARGE.
3. SHOULD SILT OR SEDIMENT ENTER THE DITCHES OR GUTTERLINES ON THE ADJACENT BOUNDRY STREETS, APPROPRIATE BMP'S WILL BE PLACED WITHIN THE SUBDIVISION TO PREVENT THIS.
4. ANY MUD TRACKED ONTO ADJACENT STREETS WILL BE REMOVED AT THE END OF EACH WORK DAY.
5. CONTRACTORS WORKING WITHIN THE SITE WILL NOT BE REQUIRED TO USE INDIVIDUAL BMP'S AS LONG AS THOSE SPECIFIED ABOVE ARE IN PLACE AND EFFECTIVE. CONTRACTORS WORKING ON THE BOUNDRY LINE STREETS OR ON ADJACENT PROPERTIES TO EXTEND UTILITIES ARE EXPECTED TO USE BMP'S AT THEIR WORK LOCATIONS, AS NEEDED.
6. UTILIZE STABILIZED CONSTRUCTION ENTRANCE AT ENTRANCE AND EXIT ONTO ANY EXISTING PUBLIC STREETS.
7. THE SUBDIVISION DEVELOPER (OWNER) SHALL INSTALL AND MAINTAIN THE ON-SITE BMP'S.

PHASE 2 – INSTALLATION OF STORM SEWER

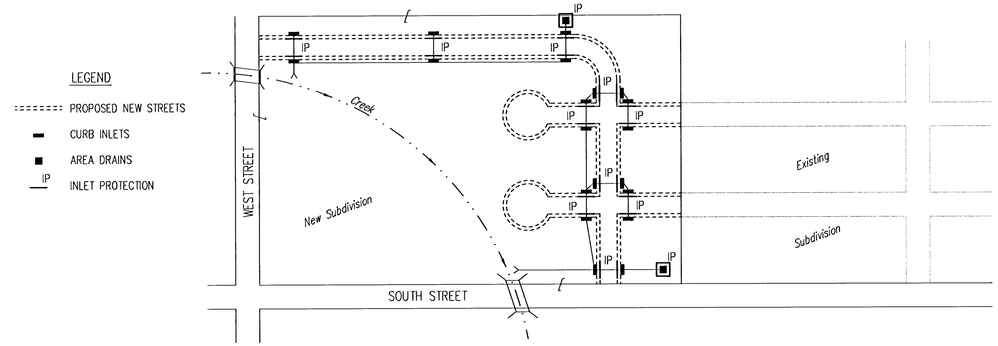

1. DURING THIS PHASE OF SUBDIVISION DEVELOPMENT, ALL BMP'S REQUIRED IN PHASE 1 SHALL REMAIN IN PLACE AND BE MAINTAINED.
2. AS NEW STORM SEWERS, WITH INLETS, ARE INSTALLED, THE STORM SEWERS MUST NOW BE PROTECTED SO ALL NEW INLETS BECOME POINTS OF COMPLIANCE.
3. AREA DRAINS – AS SOON AS WATER CAN FLOW INTO THESE DRAINS, HAYBALE OR SILT FENCE PROTECTION WILL BE INSTALLED AROUND THEM.
4. CURB OPENING INLETS – AS SOON AS WATER CAN FLOW INTO THESE DRAINS, INLET PROTECTION BMP'S MUST BE INSTALLED. SEE PHASE 3 – STREET CONSTRUCTION.
5. THE STORM SEWER CONTRACTOR WILL BE RESPONSIBLE FOR INSTALLING THESE BMP'S. IF WATER CANNOT FLOW INTO CURB INLETS UNTIL STREET CONSTRUCTION IS COMPLETE, THEN STREET CONTRACTOR WILL INSTALL INLET PROTECTION.
6. THE SUBDIVISION DEVELOPER WILL MAINTAIN THESE BMP'S ONCE INSTALLED.
7. ONCE ALL DISTURBED GROUND DRAINING TO AN INLET HAS BEEN RESTABILIZED WITH GRASS OR SOD, THE SUBDIVISION DEVELOPER WILL BE RESPONSIBLE FOR PERMANENTLY REMOVING THE INLET PROTECTION.

PHASE 3 – STREET CONSTRUCTION

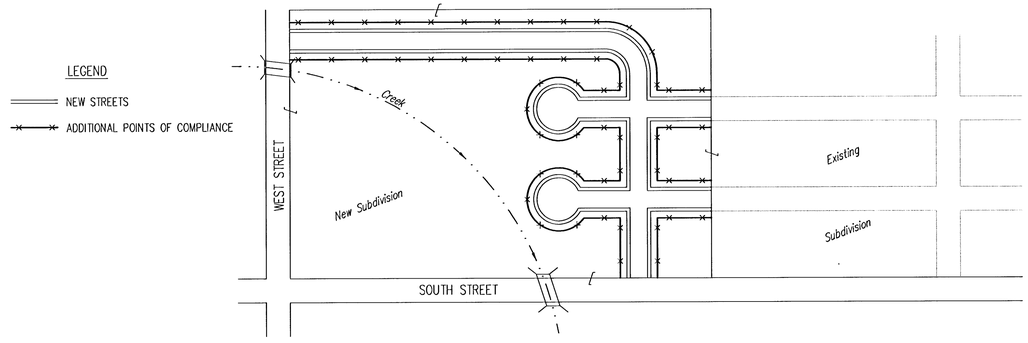

1. DURING THIS PHASE OF SUBDIVISION CONSTRUCTION, NEW STREETS ARE INSTALLED. ALL BMP'S INSTALLED DURING PHASE 1 AND 2 MUST STILL BE MAINTAINED. THE POINT OF COMPLIANCE NOW SHIFTS TO THE BACK OF CURB ALONG EACH STREET.
2. CURB OPENING INLET PROTECTION:
   A. SUMP AREAS – INLET PROTECTION SHALL BE PROVIDED WHEN STREET SUBGRADE WORK IS COMPLETED.
   B. NON-SUMP LOCATIONS – PROVIDE INLET PROTECTION AS SOON AS BASE COURSE ASPHALT IS INSTALLED, BEFORE THE SURFACE COURSE LIFT.
3. BMP'S WILL BE REQUIRED BACK OF CURB WHEREVER WATER CAN FLOW OVER THE CURB AND THE CURB HAS BEEN BACKFILLED TO WITHIN 3" OR LESS OF THE TOP OF CURB (SEE CURB BACKFILL DETAIL). FOR CURBS NOT YET ENTIRELY BACKFILLED (3" OR MORE BELOW TOP OF CURB), BMP'S WILL BE REQUIRED AT POINTS WHERE WATER BREAKS OVER CURB WHICH COULD RESULT IN THE PLACEMENT OF SEDIMENT IN THE GUTTER.
4. SEE DETAIL THIS SHEET ON BACK OF CURB PROTECTION.
5. THE BACK OF CURB PROTECTION SPECIFIED ON THIS PLAN MAY HAVE TO BE SUPPLIMENTED WITH HAYBALE OR SILT FENCE BMP'S AT LOCATIONS WHERE CONCENTRATED FLOW RESULTS IN SEDIMENT BEING CARRIED OVER THE EXCELSIOR MATS.
6. THE STREET CONTRACTOR WILL BE RESPONSIBLE FOR INSTALLING BACK OF CURB BMP'S.
7. THE INDIVIDUAL LOT OWNERS WILL BE RESPONSIBLE FOR MAINTAINING THE BACK OF CURB BMP'S IN FRONT OF THEIR LOTS UNTIL SUCH TIME AS ADJACENT DISTURBED EARTH IS STABILIZED WITH GRASS OR SOD.

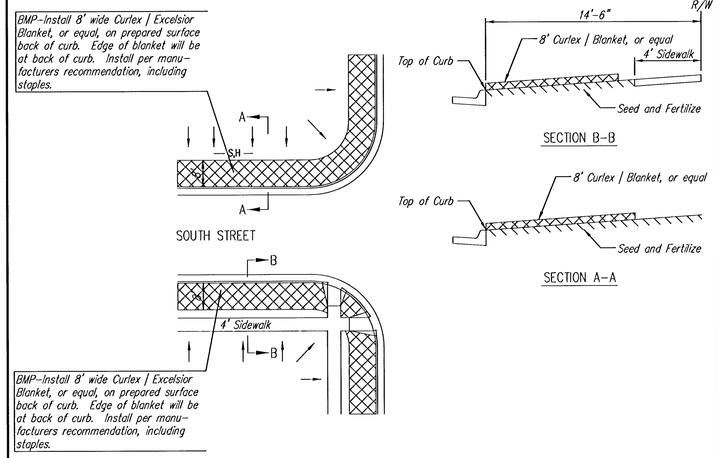

BACK OF CURB PROTECTION DETAIL

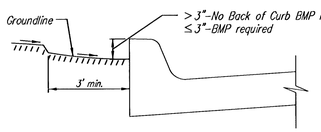

CURB BACKFILL DETAIL

GENERAL NOTES:

1. THE INTENT OF ALL BEST MANAGEMENT PRACTICES (B.M.P.'S) IS TO PREVENT ERODED SOIL FROM ENTERING DITCHES, STORM SEWERS, OR ANY OTHER DRAINAGE FEATURE.
2. THIS SHEET IS INTENDED TO PROVIDE GUIDELINES AS TO WHAT TYPE OF BMP'S WILL BE INSTALLED DURING THE CONSTRUCTION PROCESS. CONTRACTORS ARE EXPECTED TO BID PROJECTS ACCORDINGLY.
3. BMP'S SHALL BE MAINTAINED DURING THE CONSTRUCTION PROCESS TO REMAIN EFFECTIVE. MAINTENANCE SHALL BE AS INDICATED ON THE BMP DETAIL SHEETS.
4. PERSONS DESTROYING BMP'S SHALL BE RESPONSIBLE FOR IMMEDIATELY REPAIRING THEM OR INSTALLING SUITABLE REPLACEMENT BMP'S.
5. THE DEVELOPMENT OF ANY SUBDIVISION THAT DISTURBS 5 ACRES OR MORE WILL REQUIRE A FEDERAL/STATE NPDES STORMWATER PERMIT. THE PREPARATION OF A STORMWATER POLLUTION PREVENTION PLAN IS REQUIRED. EROSION CONTROL BMP'S ARE REQUIRED. THE DETAILS SHOWN ON THIS SHEET ARE THE MINIMUM STANDARDS TO BE SHOWN ON POLLUTION PREVENTION PLAN.
6. FOR SUBDIVISIONS SMALLER THAN 5 ACRES, SOIL EROSION BMP'S ARE REQUIRED. ALSO, DEVELOPERS AND CONTRACTORS ARE ENCOURAGED TO DEVELOP POLLUTION PREVENTION PLANS FOR EACH PROJECT PRIOR TO CONSTRUCTION.
7. FAILURE TO USE AND MAINTAIN BMP'S IS A VIOLATION OF SECTION 16.32 OF THE CITY CODE AND WILL SUBJECT THE SUBDIVISION DEVELOPER AND CONTRACTORS TO THE PENALTIES PROVIDED THEREIN.
8. THE APPLICATION OF BMP'S SHOWN ON THIS SHEET IS FOR SITUATIONS NORMALLY ENCOUNTERED. FROM TIME TO TIME, SITUATIONS WILL ARISE THAT MAY REQUIRE A DIFFERENT BMP OTHER THAN THAT SHOWN. BMP'S, OTHER THAN THOSE SHOWN, MAY BE UTILIZED SO LONG AS THEY ARE EFFECTIVE AND MAINTAINED.
9. A STABILIZED EARTH SURFACE IS DEFINED AS ONE THAT IS HARD SURFACED WITH CONCRETE, ASPHALT, OR THE LIKE, OR ONE ON WHICH 70% OF THE GRASS HAS GERMINATED ON THE ENTIRE SURFACE.

CITY OF WICHITA

SOIL EROSION BMPS SUBDIVISION DEVELOPMENT PROCESS

CHRISTOPHER M. CARRIER, P.E.
STORM WATER ENGINEER

PROJECT NUMBER	OCA NO.
468-83321	———
DATE: MAY 2001	SHEET 8 OF 10

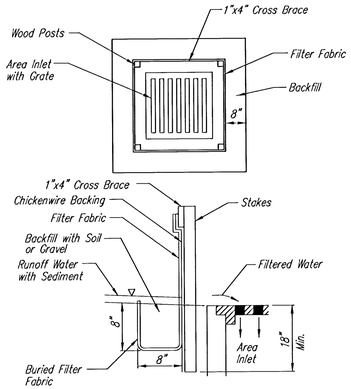

SILT FENCE BARRIERS FOR AREA INLETS
(INLET PROTECTION)

Material Specification:

Silt fence fabric should conform to the AASHTO M288 96 silt fence specification.
The wire or polymeric mesh backing used to help support the silt fence fabric should conform to the AASHTO M288 96 silt fence specification.
The posts used to support the silt fence fabric should be a hardwood material with the following minimum dimensions: 2" square (nominal) by 4' long.
The material used to frame the tops of the posts should be 1" by 4" boards.
Silt fence fabric and support backing should be attached to the wooden posts and frame with staples, wire, zip ties, or nails.

Placement:

Place a silt fence drop inlet barrier in a location where it is unlikely to be overtopped.
Water should flow through silt fence, not over it. Silt fence barriers for area inlets often fail when repeatedly overtopped.
When used as a barrierfor area inlets, silt fence fabric and posts must be supported at the top by a wooden frame.
When a silt fence barrier for area inlets is located near an inlet that has steep approach slopes, the storage capacity behind the barrier is drastically reduced. Timely removal of sediment must occur for a barrier to operate properly in this location.

Proper installation method:

Excavate a trench around the perimeter of the area inlet that is at least 8" deep by 8" wide.
Drive posts to a depth of at least 18" around the perimeter of the area inlet.
The distance between posts should be 4' or less. If the distance between two adjacent corner posts is more than 4', add another post(s) between them.
Connect the tops of all the posts with a wooden frame made of 1" by 4" boards. Use nails or screws for fastening.
Attach the wire or polymeric-mesh backing to the outside of the post/frame structure with staples, wire, zip ties, or nails.
Roll out a continuous length of silt fence fabric long enough to wrap around the perimeter of the area inlet. Add more length for overlapping the fabric joint. Place the edge of the fabric in the trench, starting at the outside edge of the trench. Line all three sides of the trench with the fabric. Backfill over the fabric in the trench with the excavated soil and compact. After filling the trench, approximately 24" to 36" of silt fence fabric should remain exposed.
Attach the silt fence to the outside of the post/frame structure with staples, wire, zip ties, or nails. The joint should be overlopped to the next post.

Note: When a silt fence barrier for area inlet is placed in a shallow median ditch, make sure that the top of the barrier is not higher than the paved road. In this configuration, water may spread onto the roadway causing a hazardous condition.

List of common placement/installation mistakes to avoid:

Water should flow through a silt fence barrier for area inlet-not over it. Place a silt fence barrier for area inlet in a location where it is unlikely to be overtopped. Silt fence barrier for area inlets often fail when repeatedly overtopped.
Do not place posts on the outside of the silt fence barrier for area inlet. In this configuration, the force of the water is not resisted by the posts, but only by the staples (wire, zip-ties, nails, etc.). The silt fence will rip and fail.
Do not install silt fence barrier for area inlets without framing the top of the posts.
The corner posts around area inlets are stressed in two directions whereas a normal silt fence is only stressed in one direction. This added stress requires more support.

Inspection and Maintenance:

Silt fence barrier for area inlets should be inspected every 7 days and within 24 hours of a rainfall of 1/2" or more. The following is a list of questions that should be addressed during each inspection:

Does water flow under the silt fence?
Does the silt fence sag excessively?
Has the silt fence torn or become detached from the posts?
Does sediment need to be removed from behind the area inlet barrier?

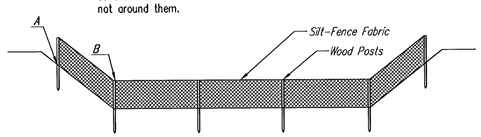

ELEVATION

SILT FENCE DITCH CHECKS
(STREAM PROTECTION)

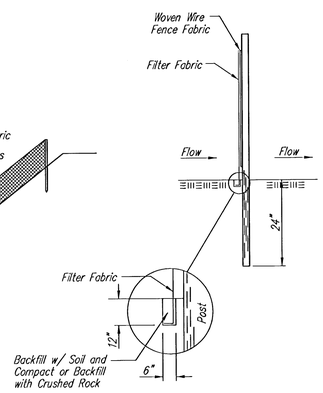

ANCHOR TRENCH DETAIL

Material Specification:

Silt fence fabric should conform to the AASHTO M288 96 silt fence specification.
The posts used to support the silt fence fabric should be a hardwood material with the following minimum dimensions: 2" square (nominal) by 4' long.
Silt fence fabric should be attached to the wooden posts with staples, wire, zip ties, or nails.

Placement:

Place silt fence in ditches where it is unlikely that it will be overtopped.
Water should flow through a silt fence ditch check, not over it. Silt fence ditch checks often fail when overtopped.
Silt fence ditch checks should be placed perpendicular to the flowline of the ditch.
The silt fence should extend far enough so that the ground level at the ends of the fence is higher than the top of the low point of the fence. This prevents water from flowing around the check.
Checks should not be placed in ditches where high flows are expected. Rock checks should be used instead.
Silt fence should be placed in ditches with slopes of 6% or less. For slopes steeper than 6%, rock checks should be used.

The following table provides check spacing for a given ditch grade:

Ditch Check Ditch grade (%)	Spacing Check Spacing (feet)
0.5	200
1.0	200
2.0	100
3.0	65
4.0	50
5.0	40
6.0	30

Proper installation method:

Excavate a trench perpendicular to the ditch flowline that is at least 12" deep by 6" wide.
Extend the trench in a straight line along the entire length of the proposed ditch check.
Place the soil on the upstream side of the trench for later use.
Roll out a continuous length of silt fence fabric on the downstream side of the trench.
Place the edge of the fabric in the trench starting at the top upstream edge of the trench.
Line two sides of the trench with the fabric as shown on detail. Backfill over the fabric in the trench with the excavated soil and compact. After filling the trench, approximately 24" to 36" of silt fence fabric should remain exposed.
Lay the exposed silt fence on the upstream side of the trench to clear an area for driving in the posts. Just downstream of the trench, drive posts into the ground to a depth of at least 24". Place posts no more than 4' apart.
Attach the silt fence to the anchored post with staples, wire, zip ties, or nails.

List of common placement/installation mistakes to avoid:

Water should flow through a silt fence ditch check-not over it. Place silt fence in ditches where it is unlikely that it will be overtopped. Silt fence installations quickly deteriorate when water overtops them.
Do not place silt fence posts on the upstream side of the silt fence fabric. In this configuration, the force of the water is not restricted by the posts, but only by the staples (wire, zip ties, nails, etc.). The silt fence will rip and fail.
Do not place a silt fence ditch check directly in front of a culvert outlet. It will not stand up to the concentrated flow.
Do not place silt fence ditch checks in ditches that will likely experience high flows. They will not stand up to concentrated flow.
Follow prescribed ditch check spacing guidelines. If spacing guidelines are exceeded, erosion will occur between the ditch checks.
Do not allow water to flow around the ditch check. Make sure that the ditch check is long enough so that the ground level at the ends of the fence is higher than the low point on the top of the fence.
Do not place silt fence ditch checks in channels with shallow soils underlain by rock. If the check is not anchored sufficiently, it will wash out.

Inspection and Maintenance:

Silt fence ditch checks should be inspected every 7 days and within 24 hours of a rainfall of 1/2" or more. The following is a list of questions that should be addressed during each inspection:

Does water flow around the ditch check?
Does water flow under the ditch check?
Does the silt fence sag excessively?
Has the silt fence torn or become detached from the posts?
Does sediment need to be removed from behind the ditch check?

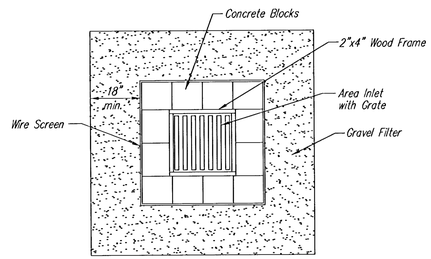

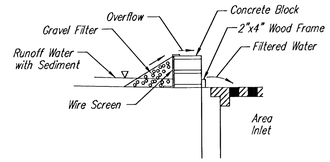

CONCRETE BLOCK FILTER FOR AREA DRAIN
(INLET PROTECTION)

Gravel barriers provide little filtering of large inflow waters. However, when installed correctly and maintained, they can effectively treat low runoff flows.

Placement of gravel filters around area drains must be completed in a manner that will not cause local flooding.

Gravel filters can be used if the immediate and adjacent area to the area drain consists of soil or pavement.

Only gravel filters are to be installed on top of the pavement.

Instructions for Installing:

STEP 1: Place concrete blocks around the grate. The blocks can be stacked one or two high and should be supported by a 2"x4" board.
STEP 2: Wrap 1/2" mesh wire screen around the concrete blocks.
STEP 3: Place 1" to 1-1/2" diameter rock around the blocks and wire screen. Be sure the rock extends down from the top of the concrete block.
STEP 4: To prevent damage to vehicles, signs warning drivers about the structures may be necessary.

An alternative method is use of gravel bags that are supported to prevent collapsing.

Use of rock having diameters smaller than 1" may result in clogging of pores and reduce the amount of water flowing into an inlet.

Maintenance:

All gravel filters installed around area drains should be inspected and repaired after each runoff event. Sediment should be removed when material is within 3" of the top of any block. Periodically, the gravel should be raked to increase infiltration and filtering of runoff waters. Accumulated sediment is to be removed immediately from roads and streets after every runoff event.

CITY OF WICHITA

SOIL EROSION BMP DETAILS

CHRISTOPHER M. CARRIER, P.E.
STORM WATER ENGINEER

PROJECT NUMBER 468-83321
OCA NO. _____
DATE MAY 2001

LEGACY 2ND ADDITION

WICHITA, SEDGWICK COUNTY, KANSAS

MINIMUM PAD ELEVATION FOR
LOWEST OPENING INTO STRUCTURES,
LOTS 1–5, BLOCK 1: 1281.9 MSL
LOTS 1–15, BLOCK 2: 1281.9 MSL

City of Wichita Benchmark:
44' north and 30' east of 1/4 Sec. Cor. @ Meridian and 43rd St. South; Elev. 1280.80 (M.S.L.)

On–Site Bench Mark:
Square Cut, Top of S. curb of 44th St. at the N.E. Cor. of Lot 1, Block 2, Legacy 2nd Addition.
Elev. 1280.76 (M.S.L.)

SRB

SCALE: 1"=50'

MACON .....=1/2" REBAR W/MACON CAP (FOUND)
V–NOTCH .....=V–NOTCH (FOUND)
MKE .....=1/2" REBAR W/MKE CAP (FOUND)
SRB .....=5/8" REBAR W/SRB CAP (SE1)
"+" CUT .....="+" CUT (FOUND)
1/2" IP .....=1/2" IRON PIPE (FOUND)
THIMBLE .....=THIMBLE WITH 1/2" IRON PIPE (FOUND)

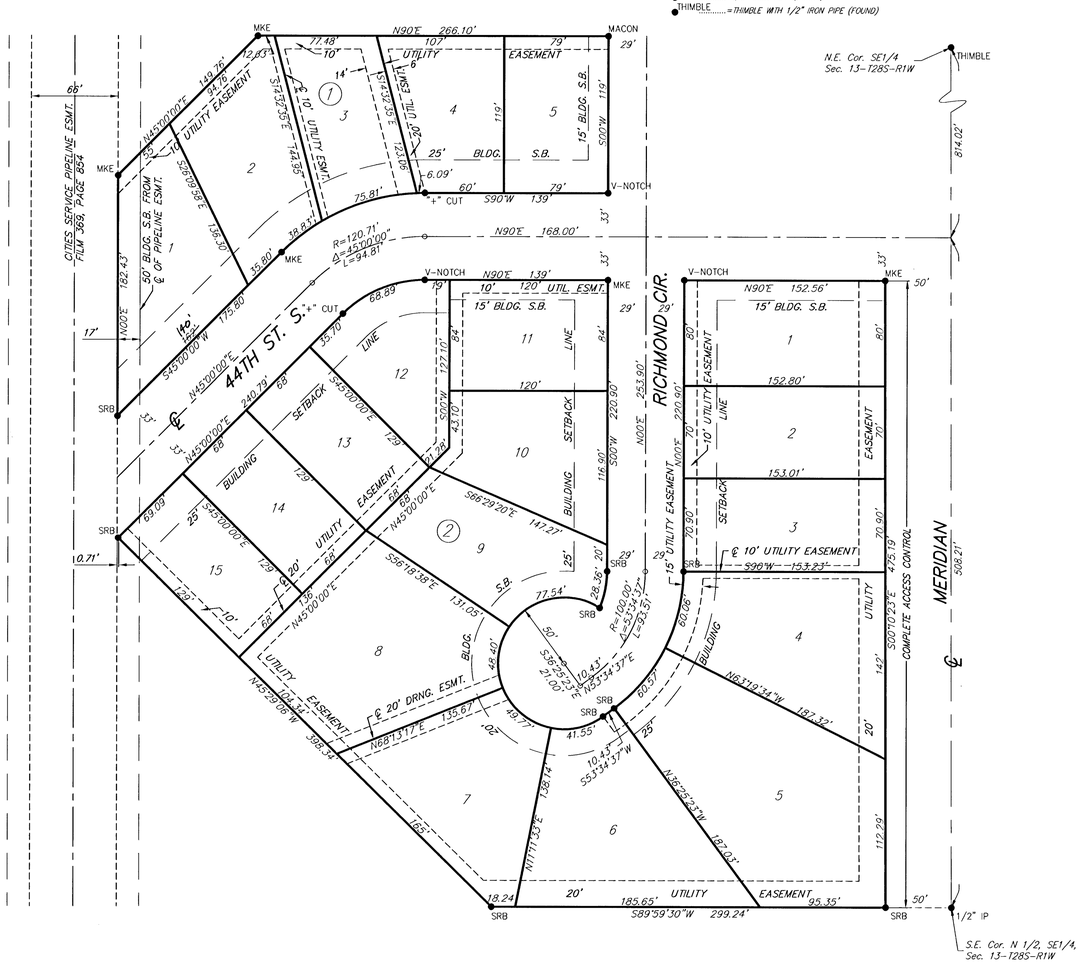

State of Kansas)
Sedgwick County) SS

We, Savoy, Ruggles & Bohm, P.A., Surveyors in aforesaid county and state, do hereby certify that, under the supervision of the undersigned, we have surveyed and platted "LEGACY 2ND ADDITION", Wichita, Sedgwick County, Kansas, and that the accompanying plat is a true and correct exhibit of the property surveyed, described as and being a replat of the following:

Lots 1 through 13, Block 11, and Lots 1 through 5, Block 8, The Legacy Addition, an Addition to Wichita, Sedgwick County, Kansas.

All being situated in the SE1/4 of Sec. 13, T27S, R1W of the 6th P.M., Sedgwick County, Kansas.

Existing Public easements and dedications being vacated by virtue of K.S.A. 12–512(b).

Savoy, Ruggles & Bohm, P.A.

Date _____

_____ Surveyor
Thomas C. Ruggles #1940

Know all men by these presents that we, the undersigned, have caused the land described in the surveyor's certificate to be platted into Lots and Blocks, to be known as "LEGACY 2ND ADDITION", Wichita, Sedgwick County, Kansas. The drainage easement is hereby granted as indicated for drainage purposes. The utility easements are hereby granted for the construction and maintenance of all public utilities. Access Controls are hereby granted to the appropriate governing body, as indicated on the face of the plat. A drainage plan has been developed for this plat, and all drainage easements and rights–of– way shall remain at established grades or as modified with the approval of the City Engineer, and unobstructed to allow for the conveyance of stormwater.

South Park Developers, L.C.

_____, Member
Fred C. Caldwell

_____, Member
Nancy J. Caldwell

State of Kansas)
Harvey County) SS

The foregoing instrument acknowledged before me, this _____day of 2001, by Fred C. Caldwell and Nancy J. Caldwell, members of South Park Developers, L.C., a limited liability company,

_____ Notary Public

My Appointment Expires _____

We, the undersigned, holders of a mortgage on the above described property, do hereby consent to this plat of "LEGACY 2ND ADDITION, Wichita, Sedgwick County, Kansas.

Sedgwick State Bank

_____, _____.

State of Kansas)
Harvey County) SS

The foregoing instrument acknowledged before me, this _____day of _____ 2001, by _____, _____ of Sedgwick State Bank, on behalf of the Bank.

_____ Notary Public

My Appointment Expires _____

This plat of "LEGACY 2ND ADDITION", Wichita, Sedgwick County, Kansas. has been submitted to and approved by the Wichita–Sedgwick County Metropolitan Area Planning Commission, Wichita, Kansas.

Dated this ____ day of _____ , 2001.

Wichita–Sedgwick County Metropolitan Area Planning Commission

_____ Acting Chair
J.D. Michaelis

_____ Secretary
Marvin S. Krout

This plat approved and all dedications shown hereon, accepted by the City Council of the City of Wichita, Kansas, this ____day of _____, 2001.

At the direction of the City Council

_____ City Manager
Chris Cherches

_____ City Clerk
Pat Burnett

Reviewed in accordance with K.S.A. 58–2005 on this _____day of _____, 2001.

_____ Deputy County Surveyor
Sedgwick County Kansas
Tricia L. Robello, LS #1246

Entered on transfer record this ____ day of _____, 2001.

_____ County Clerk
Don Brace

State of Kansas) SS
Sedgwick County)

This is to certify that this plat has been filed for record in the office of the Register of Deeds, this ____ day of _____, 2001, at _____ o'clock __M, and is duly recorded.

_____ Register of Deeds
Bill Meek

_____ Deputy
Linda Kizzire

SRB 924 NORTH MAIN WICHITA, KANSAS 67203 http://www.srb1.com
316–264–8008 FAX 264–4621 E–mail: srb@srb1.com
SAVOY, RUGGLES & BOHM, P.A.
ENGINEERING & SURVEYING

DWG FILE: 01956PF–JTS
PROJECT NO. 0001956P

PROJ. # 468–83321 10/10

10-10-01