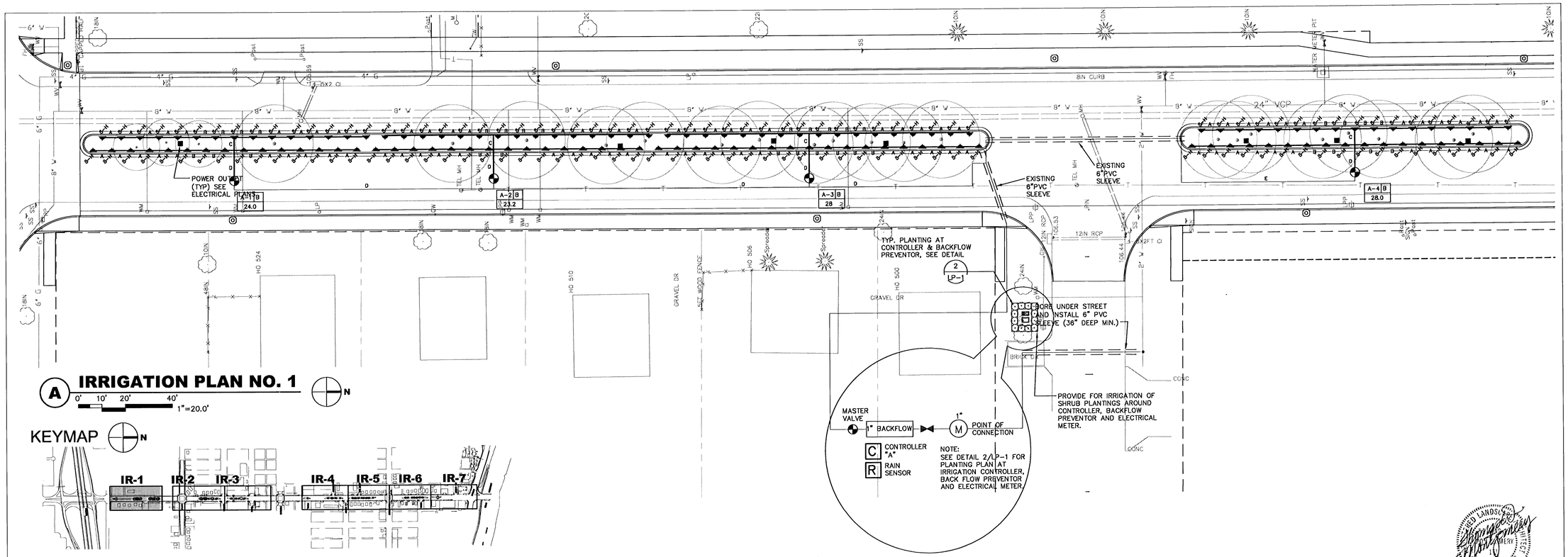

A IRRIGATION PLAN NO. 1

0' 10' 20' 40'
1"=20.0'

N

KEYMAP

IRRIGATION LEGEND

IRRIGATION HEADS AND NOZZLES

POP-UP HEADS (WEATHER MATIC OR APPROVED EQUAL)

	NOZZLE SYMBOLS	PIPE SIZE SYMBOLS
LX4-HALF	H = HALF	A = 3/4"
LX4-QUARTER	Q = QUARTER	B = 1"
LX4-VARIES	V = ADJUSTABLE ARC	C = 1-1/4"
		D = 1-1/2"
		E = 2"
		F = 2-1/2"

IRRIGATION EQUIPMENT

- WEATHERMATIC ELECTRIC VALVE MODEL 2100 WITH PRESSURE REGULATOR, OR APPROVED EQUAL.
- STEEL GATE VALVE, NON-RISING STEM, SIZE AS SHOWN OR PIPE SIZE
- C — WEATHERMATIC CONTROLLER MODEL RM7, 7 STATIONS, LMSP PEDESTAL MOUNT (OR APPROVED EQUAL) LOCATE WHERE DIRECTED BY THE OWNER'S REPRESENATAIVE – COORDINATE ELECTRICAL SUPPLY
- R — RAIN SENSOR – MINI-CLIK II OR APPROVED EQUAL. MOUNT RAIN SENSOR ON CONTROLER PEDESTAL.
- EXISTING 6" PVC SLEEVES OR NEW SLEEVE (AS INDICATED)

ZONE INFORMATION BOX

CONTROLLER LETTER & ZONE NUMBER — A-4 B
ZONE G.P.M. — 45.6

VALVE SIZE
A = 1" VALVE
B = 1-1/2" VALVE
C = 2" VALVE

NOTE:
LATERAL LINES ARE CLASS 200 PVC SOLVENT WELD PIPE.
MAIN LINES ARE SCHEDULE 40 SOLVENT WELD PIPE.

1 IRRIGATION LEGEND AND NOTES
LI101

NOTE:
INSTALL AT LEAST 12" ABOVE THE HIGHEST PIPING OR OUTLET DOWNSTREAM OF THE DEVICE AND IN A MANNER TO PRECLUDE BACK PRESSURE. INSTALL FOR EASY ACCESSIBILITY FOR TESTING & MAINTENANCE PURPOSES.

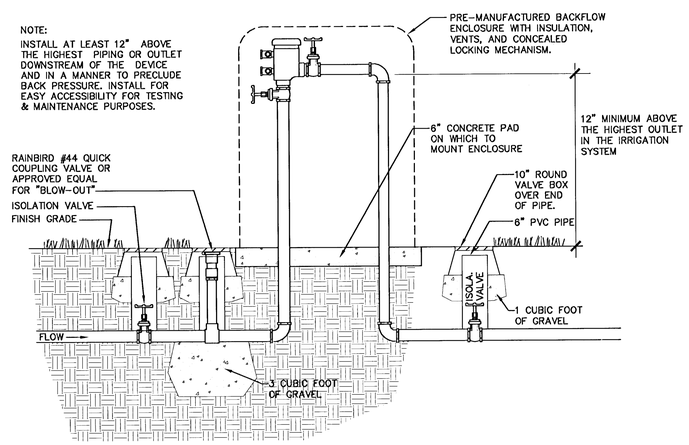

2 BACKFLOW PREVENTER DETAIL
LI101
NOT TO SCALE

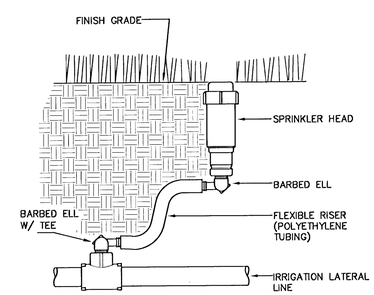

3 POP-UP SPRAY HEAD ON FLEXIBLE RISER
LI101
NOT TO SCALE

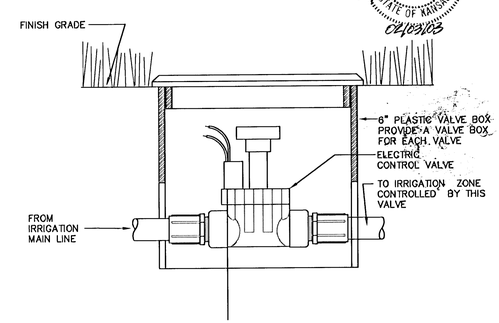

4 ELECTRIC CONTROL VALVE
LI101
NOT TO SCALE

GENERAL NOTES:

1. REFERENCE THE CITY OF WICHITA STANDARD SPECIFICATIONS FOR IRRIGATION REQUIREMENTS.

2. IRRIGATION PLANS ARE DIAGRAMMATIC. EXACT PLACEMENT OF LINES AND EQUIPMENT TO BE COORDINATED WITH THE OWNER'S REPRESENTATIVE.

MKEC
ENGINEERING CONSULTANTS
411 N. WEBB ROAD
WICHITA, KS. 67206
316-684-9600

SENECA STREET (PROJECT NAME)		
IRRIGATION PLAN NO. 1 (SHEET TITLE)		
TDM (DESIGN BY:)	LES (DRAWN BY:)	TDM (CHECKED BY:)
02/03/03 (DATE)	LI101 (DRAWING NAME)	LI 6 (SHEET / OF)