Sta. 15+00.0 SWS Line No. 1A=
Sta. 11+91.0 SWS Line No. 1
Std. R.C. Manhole
L=6'-0", W=6'-0"
Top Elev.=207.5

Sta. 16+08.8 SWS Line No. 1A=
Sta. 30+40.41, 37.67' Rt. ℄ Red Oaks
Construct Std. Type 1A Curb Inlet
L=5'-0", W=3'-0"
Top Elev.=208.34
Install 55.3 L.F. 24" RCP (E)
See Sheet Nos. 24 & 33

Install 51.0 L.F.
of Flowable Fill
Fill to Elev.=205.94

Sta. 16+64.1 SWS Line No. 1A=
Sta. 30+40.41, 17.67' Lt. ℄ Red Oaks
Construct Std. Type 1A Curb Inlet
L=5'-0", W=3'-0"
Top Elev.=208.59
Install 113.3 L.F. 18" RCP (E)
See Sheet Nos. 24 & 33

Sta. 17+77.4 SWS Line No. 1A
Construct Std. Area Inlet
L=5'-4", W=3'-10"
Top Elev.=205.86
Install 214.6 L.F. 18" RCP (N)
See Sheet Nos. 26, 31 & 32

Sta. 14+82.0 SWS Line No. 1A
Construct Std. Area Inlet
L=5'-4", W=3'-10"
Top Elev.=206.00
See Sheet Nos. 26, 31 & 32

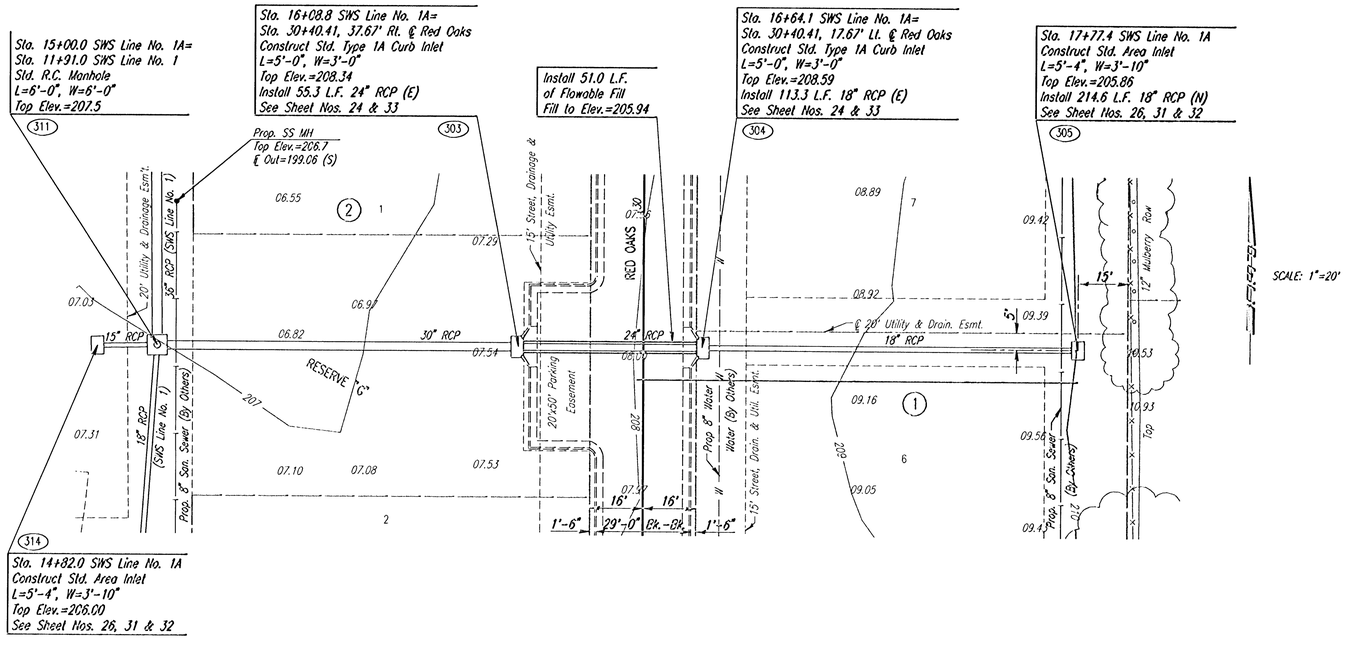

SWS LINE NO. 1A COORDINATE LIST		
POINT	NORTH	EAST
311	386244.3913	2370379.4485
303	386245.5883	2370488.2135
304	386246.1963	2370543.5445
305	386247.4423	2370656.8685
314	386244.0243	2370361.4525

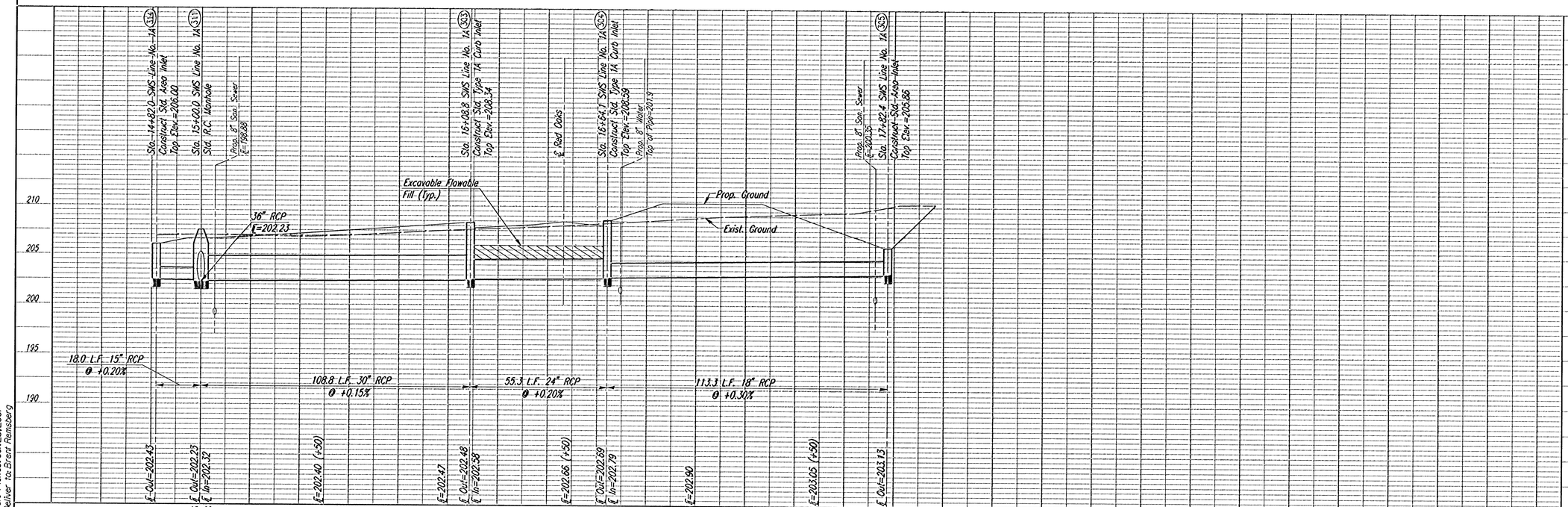

REMINGTON PLACE-PHASE 1

SWS LINE NO. 1A
STA 14+82.0 TO STA 17+77.4

C.O.W. PROJ. NO. 472-76-245-8375-000-000-001

Professional Engineering Consultants, P.A.
303 S. TOPEKA • WICHITA, KANSAS 67202
316-262-2691 • FAX 316 262-5063

Designed by: BER
Drawn by: BGS
Job No. 01158
Date: JUNE 2001

Sheet 18 of 58

I:\2001\01158\swslnlaydgn
Date Plotted: Oct. 23, 2001
Deliver to: Brent Reinsberg