PROJECT NO.	SHEET NO.	TOTAL SHEETS
472-76-245-83375-000-000-001	26	58

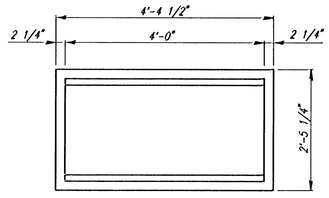

FRAME DETAIL
(Wt.=460 lbs.)

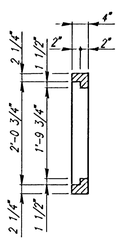

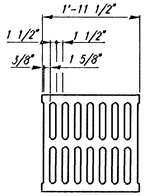

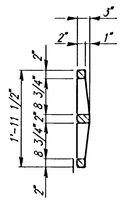

GRATE DETAIL
(Wt.=180 lbs.)

GENERAL NOTES

CONCRETE SHALL BE C.O.W. STANDARD PAVING MIX. ALL EXPOSED EDGES SHALL BE FINISHED WITH AN APPROVED EDGING TOOL.

REINFORCING STEEL SHALL BE A MINIMUM GRADE 40, A.S.T.M. A615. ALL DIMENSIONS RELATIVE TO PLACEMENT OF REINFORCING ARE TO THE CENTERLINE OF BARS UNLESS OTHERWISE NOTED.

INLET CASTINGS SHALL BE MANUFACTURED USING GOOD QUALITY GRAY IRON CONFORMING TO CLASS 30 OF A.S.T.M. DESIGNATION A-48. DIMENSIONS AND WEIGHTS SHOWN ON THE DETAILED DRAWINGS SHALL BE CONSIDERED AS MINIMUM REQUIREMENTS AND ANY DEVIATIONS FROM THE DIMENSIONS SHOWN MUST BE SPECIFICALLY APPROVED. THE FINISHED CASTINGS SHALL BE OF UNIFORM QUALITY, FREE FROM BLOWHOLES, POROSITY, HARD SPOTS, SHRINKAGE DISTORTIONS OR OTHER DEFECTS.

CONSTRUCTION REQUIREMENTS AND MATERIALS FOR MASONRY WALLS SHALL CONFORM TO THE REQUIREMENTS OF THE STANDARD SPECIFICATIONS.

INLET FLOOR SHALL BE SHAPED WITH UNREINFORCED CONCRETE (8 SACK SAND MIX) TO CREATE FLOW CHANNELS AND TO INCREASE HYDRAULIC EFFICIENCY SUCH THAT THE INLET WILL BE SELF CLEANING BETWEEN ALL INLET AND/OR OUTLET PIPES.

AREA INLETS SHALL BE MEASURED AND PAID FOR AT THE CONTRACT UNIT PRICE BID PER EACH. THIS SHALL BE CONSIDERED FULL COMPENSATION FOR ALL EXCAVATION, BACKFILLING, MATERIALS, LABOR, CONNECTION TO EXISTING STRUCTURES (IF REQUIRED), EQUIPMENT, TOOLS, AND INCIDENTALS NECESSARY TO COMPLETE THE WORK.

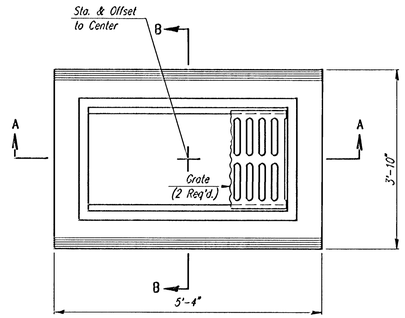

PLAN

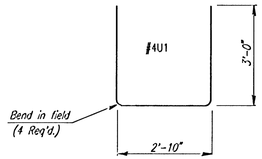

BENDING DIAGRAM

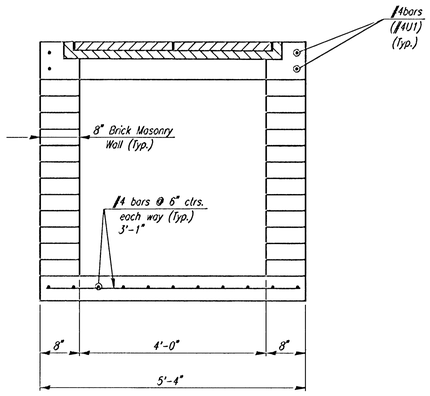

SECTION A-A

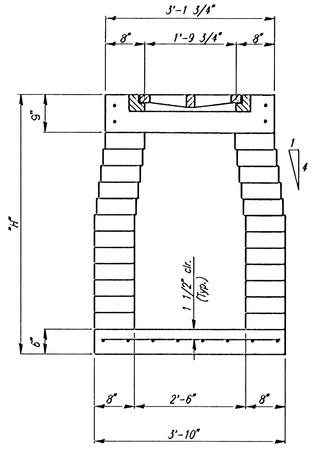

SECTION B-B

AREA INLET

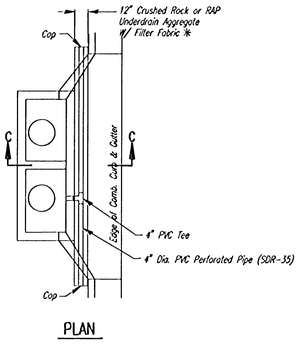

PLAN

* UNDERDRAIN AGGREGATE
PERCENT OF AGGREGATE RETAINED

1"	0
3/4"	0-10
3/8"	45-80
#4	90-100
#8	95-100

ROCK QUALITY SHALL CONFORM TO THE REQUIREMENTS SPECIFIED BY THE KDOT 1990 EDITION STANDARD SPECIFICATION SUBSECTION 1102 FOR DURABILITY CLASS I.

PAVEMENT UNDERDRAIN LOCATIONS		
STREET	STATION	SIDE
FREDERIC	18+28.00	LT. & RT.
FREDERIC	27+42.53	LT. & RT.
RED OAKS	30+40.41	LT. & RT.
19TH STREET NORTH	62+30.00	LT.
19TH STREET NORTH	62+60.45	RT.

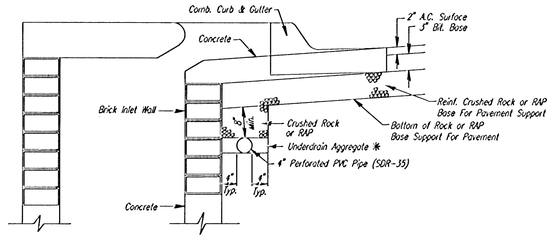

Min. 18 Perforations Per Lin. Ft. @ 1/4" Dia. Perforations To Be on Bottom Half

SECTION C-C

PAVEMENT UNDERDRAIN DETAIL

NOTE: PLACE 4" PVC PERFORATED PIPE AT ALL DRAINAGE SUMP LOCATIONS

COST OF UNDERDRAIN SYSTEM TO BE INCIDENTAL TO THE REINFORCED CRUSHED ROCK OR REINFORCED RECYCLED ASPHALT PAVEMENT (RAP) BASE.

INLET TYPE MAY VARY FROM THAT SHOWN.

NOTE: SWS CONTRACTOR SHALL INSTALL SDR 35, 4" DRAIN PIPE STUB ONLY THROUGH WALL OF THIS CURB INLET AND CAP TO ALLOW FUTURE CONNECTION OF TEE AND ADDITIONAL DRAIN PIPE BY OTHERS.

NOTE: PAVEMENT CONTRACTOR WILL BE REQUIRED TO INSTALL SDR 35, 4" PERFORATED DRAIN PIPE AND TEE AS INDICATED IN THE DETAILS ABOVE. A PIPE STUB HAS BEEN INSTALLED THROUGH WALLS OF CURB INLETS BY OTHERS IN A MANNER ALLOWING CONNECTION OF ADDITIONAL DRAIN PIPE AND TEE AS REQUIRED BY DETAILS ABOVE.

No.	Revisions	By	Date
1			

REMINGTON PLACE-PHASE I
CITY OF WICHITA, KANSAS

STD. AREA INLET AND PAVEMENT UNDERDRAIN DETAILS

Professional Engineering Consultants, P.A.
303 S. TOPEKA • WICHITA, KANSAS 67202
316-262-2691 • FAX 316-262-3003

Designed by	BER	Checked by			
Drawn by	BJS	Date	JUNE 2001	Job No.	0115B

I:\2001\0115B\Inlet12.dgn
Date Plotted: Aug. 30, 2001
Deliver to: Brent Reinsberg