SERVICE BOX CONSTRUCTION/INSTALLATION DETAILS

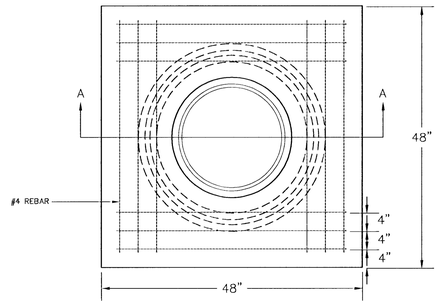

PRE-CAST CONCRETE SERVICE BOX

(36" I.D. X 54" RCP) with 6" CAP

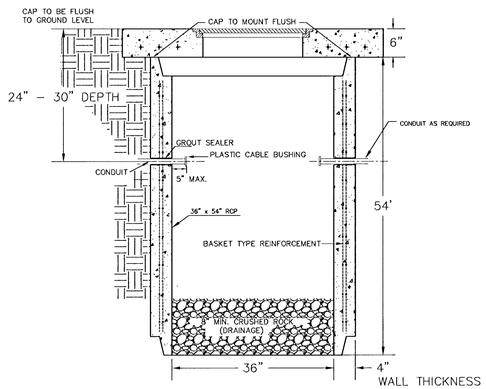

SECTION A–A

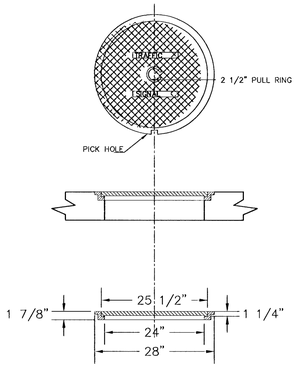

RING & COVER DETAIL

CONDUIT/DETECTOR WIRE INSTALLATION DETAILS

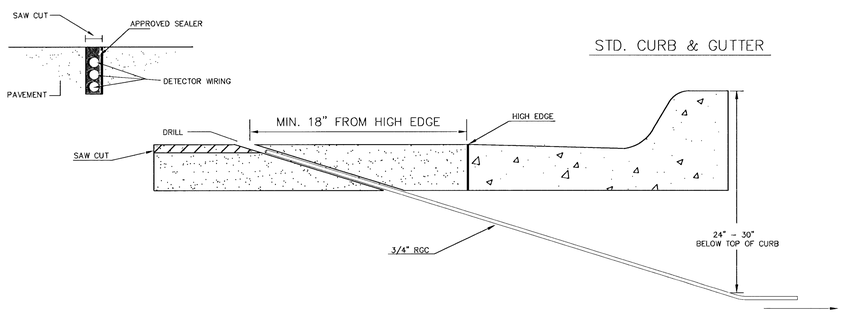

STD. CURB & GUTTER

170 CONTROLLER PAD DETAILS

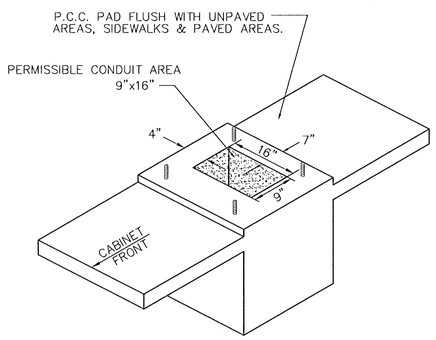

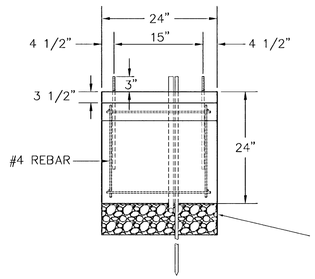

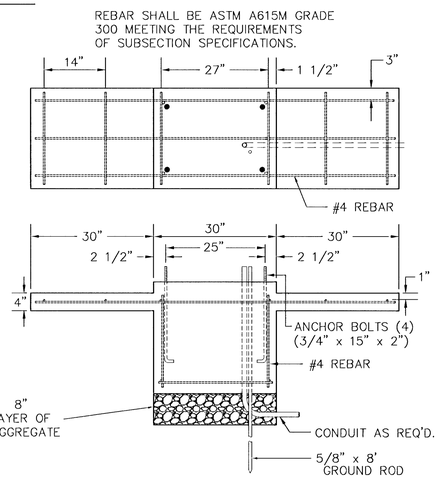

JUNCTION BOX DETAILS

PRE-FAB Junction Box
(24" I.D. X 36" R.C.P.)

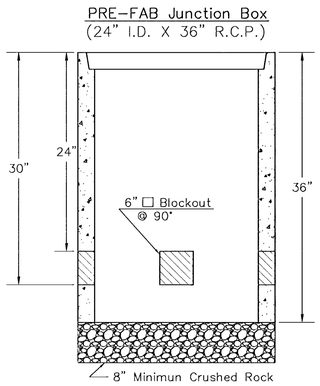

SECTION A–A

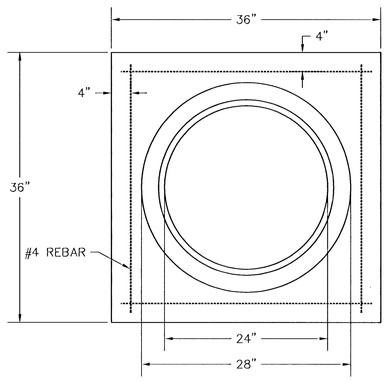

JUNCTION BOX CAP

36" x 36" x 6"
TOP OF CAP TO BE FLUSH WITH GROUND LEVEL.

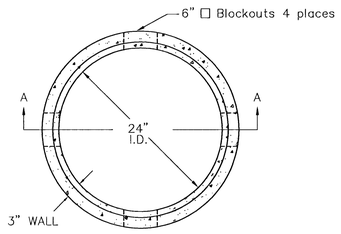

** SEE SERVICE BOX INSTALLATION FOR RING & COVER DETAILS.

NOTES:

SERVICE & JUNCTION BOX:

1. CONDUIT CONNECTION TO BE FLUSH TO WITHIN 5" OF INSIDE FACE OF SIDE WALL, CONDUIT TO DRAIN INTO SERVICE BOX.
2. CONDUIT CONNECTIONS TO SERVICE BOX SHALL BE TERMINATED WITH PLASTIC CABLE BUSHING.
3. CONDUIT SHALL BE SEALED WITH APPROVED SEALER AT INSIDE WALL FACE.
4. ALL SERVICE & JUNCTION BOXES TO HAVE 8" OF CRUSHED ROCK.

TRENCHING:

1. DEPTH TO BE 30" MINIMUM WITH ROCK & STUBBLE FREE BACKFILL TO SERVE AS BEDDING MATERIAL. MAINTAIN MINIMUM CONDUIT DEPTH IN TRENCH.
2. BACKFILL TO BE COMPACTED IN 6" LOOSE LIFTS BY HAND OR MECHANICAL TAMPING TO A 95% STANDARD DENSITY.

CONDUIT:

1. SLOPE CONDUIT TO DRAIN AS DIRECTED BY THE ENGINEER.
2. 3" RIGID STEEL CONDUIT BTWN. SERVICE BOXES.
   1 1/4" " " " BTWN. SERVICE & JUNCTION BOXES.
   3/4" " " " BTWN. JUNCTION BOXES.
   3/4" " " " BTWN. JUNCTION BOX & DETECTOR LOOP SAW CUT

REV. DATE	COMMENTS	INT

PROJECT NUMBER	SHEET NAME	ENGINEERING DIRECTORY
472-83372	SB-DTL	F:\\kelog_gr\traffic

DESIGN	DRAWN	APPROVED	DATE	SCALE	BAUGHMAN NO
STAFF	STAFF	STAFF	April 01	NONE	01-01-E914

SERVICE/JUNCTION BOX, CONTROLLER PAD CONSTRUCTION/INSTALLATION DETAILS
ONE KELLOGG PLACE 2ND

BAUGHMAN COMPANY, P.A.
ENGINEERING, SURVEYING, & PLANNING
316-262-7271 • 315 ELLIS • WICHITA, KANSAS 67211

SHEET 18 OF 46

F:\Eng\KELLOG_GR\KELLOGG\Traffic\sb-dtl.dwg Thu Jun 21 03:35:50 2001