

ALT. LONGITUDINAL CONSTRUCTION JOINT

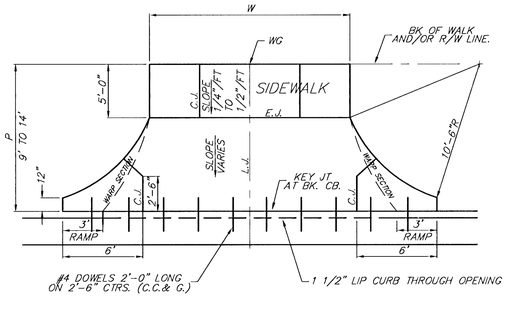

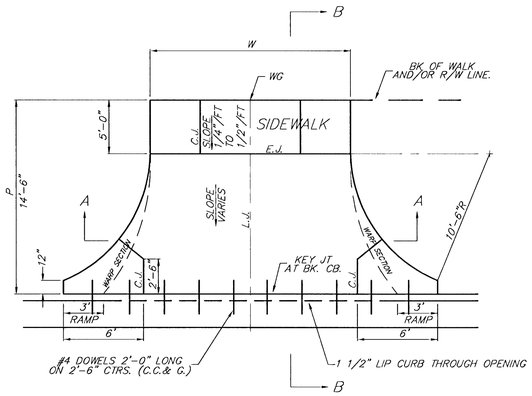

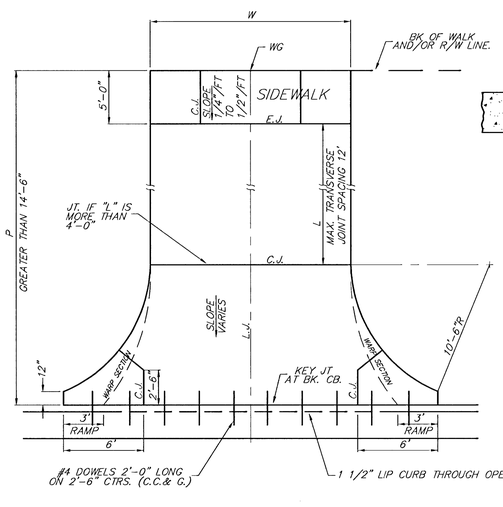

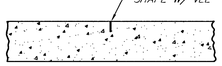

CONTRACTION JOINT (C.J.) OR LONGITUDINAL JOINT (L.J.)

NO SAWN JOINTS WILL BE ALLOWED

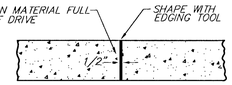

EXPANSION JOINT (E.J.)

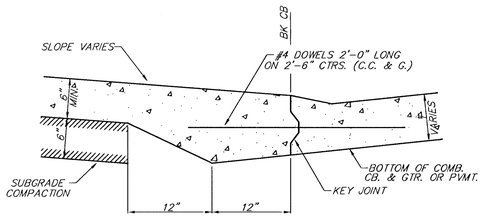

BACK OF CURB DETAIL
SECTION B–B (NO SCALE)

PARKING WIDTH "P"	9'	10'	11'	12'	13'	14.5'	20'	25'	30'	35'	40'	45'	50'
ABSOLUTE MAX. DIST. OF P.T. "WG" ABOVE OR BELOW TOP OF FULL CURB	0.35'	0.35'	0.40'	0.45'	0.60'	0.80'	1.35'	1.85'	2.35'	2.85'	3.35'	3.85'	4.35'
OPTIMUM MAX. DIST. OF P.T. "WG" ABOVE OR BELOW TOP OF FULL CURB	0.35'	0.35'	0.40'	0.45'	0.60'	0.70'	1.04'	1.30'	1.56'	1.82'	2.08'	2.34'	2.60'
OPTIMUM MIN. DIST. OF P.T. "WG" ABOVE OR BELOW TOP OF FULL CURB	0.19'	0.21'	0.23'	0.25'	0.27'	0.30'	0.42'	0.52'	0.62'	0.72'	0.82'	0.92'	1.02'
ABSOLUTE MIN. DIST. OF P.T. "WG" ABOVE OR BELOW TOP OF FULL CURB	–.19'	–.16'	–.13'	–.10'	–.06'	0.00'	0.00'	0.15'	0.25'	0.35'	0.45'	0.55'	0.65'

RADIUS RAMP DRIVES (P = 9.0' & GREATER)

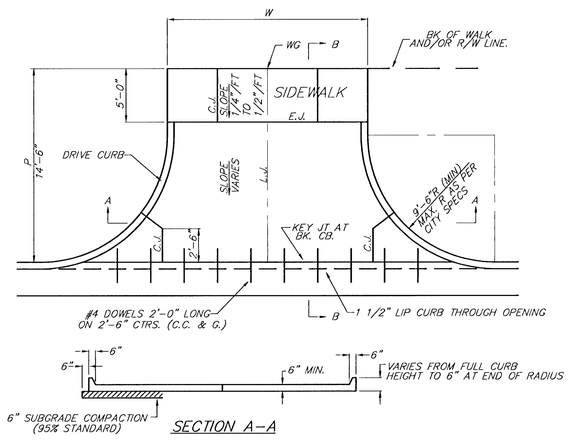

SECTION A–A

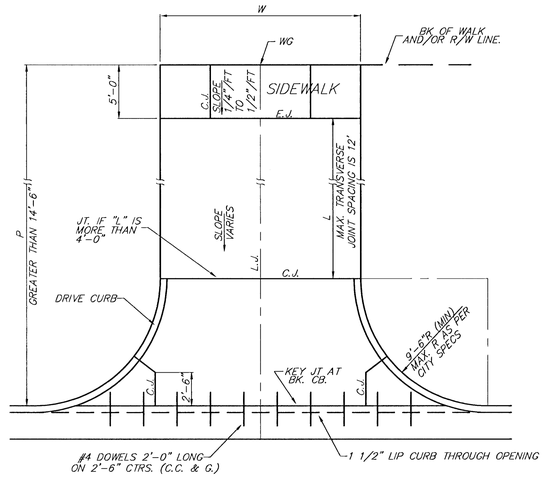

PARKING WIDTH "P"	14.5'	20'	25'	30'	35'	40'	45'	50'
ABSOLUTE MAX. DIST. OF P.T. "WG" ABOVE TOP OF FULL CURB	0.80'	1.35'	1.85'	2.35'	2.85'	3.35'	3.85'	4.35'
OPTIMUM MAX. DIST. OF P.T. "WG" ABOVE TOP OF FULL CURB	0.70'	1.04'	1.30'	1.56'	1.82'	2.08'	2.34'	2.60'
OPTIMUM MIN. DIST. OF P.T. "WG" ABOVE TOP OF FULL CURB	0.30'	0.42'	0.52'	0.62'	0.72'	0.82'	0.92'	1.02'
ABSOLUTE MIN. DIST. OF P.T. "WG" ABOVE TOP OF FULL CURB	0.00'	0.00'	0.15'	0.25'	0.35'	0.45'	0.55'	0.65'

FULL RADIUS DRIVES (P = 14.5' & GREATER)

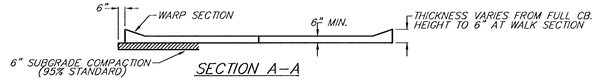

SECTION A–A

GENERAL NOTES

1. DRIVEWAY CONSTRUCTION DETAILED ON THIS SHEET IS FOR USE WITH FULL HEIGHT STREET CURBS AND IN AREAS WITHOUT FULL WALK CONSTRUCTION IN THE PARKING.
2. ONE LONGITUDINAL JOINT SHALL BE CONSTRUCTED ALONG THE CENTERLINE OF DRIVES HAVING A "W" DIMENSION OF 24' OR LESS. TWO LONGITUDINAL JOINTS SHALL BE CONSTRUCTED WITH EQUAL SPACINGS NOT TO EXCEED 10' FOR DRIVES WITH A "W" DIMENSION GREATER THAN 24'.
3. DRIVEWAY WIDTH DENOTED AS "W" ON THE DETAIL DRAWINGS SHALL BE A MINIMUM OF 10' AND A MAXIMUM OF 30'. THE MAXIMUM OPENING FOR RADIUS TYPE DRIVES WITH CURBS THROUGH THE RADIUS SHALL NOT EXCEED 52' AT THE STREET CURB LINE.
4. CONSTRUCTION JOINT SPACING IN THE DRIVEWAY WALK SECTION SHALL BE A MINIMUM OF 3' AND A MAXIMUM OF 6' AND ARE TO BE EQUALLY SPACED WITHIN THIS RANGE. WALK SECTION SHALL BE CONSTRUCTED TO THE SAME THICKNESS AS THE DRIVEWAY.
5. DOWEL BARS SHALL BE OMITTED FROM THE KEYED CONSTRUCTION JOINT ALONG THE BACK OF THE STREET CURB LINE WHEN DRIVEWAYS ARE CONSTRUCTED IN CONJUNCTION WITH NEW CONCRETE PAVEMENT CONSTRUCTION.
6. ADDITIONAL THICKNESS OF DRIVE AS INDICATED IN THE DRAWINGS WILL NOT BE PAID FOR DIRECTLY AND THIS COST SHALL BE INCLUDED IN THE UNIT PRICE BID FOR THE DRIVEWAY CONSTRUCTION.
7. ONE HALF INCH EXPANSION JOINTS SHALL BE INSTALLED WHEREVER DRIVE CONSTRUCTION ABUTS SIDEWALK. ONE HALF INCH EXPANSION JOINTS SHALL ALSO BE INSTALLED ALONG THE PROPERTY LINE AND/OR BACK OF WALK LINE WHEN DRIVE CONSTRUCTION ALONG THIS LINE ABUTS CONCRETE PARKING LOTS OR CONCRETE DRIVE EXTENSION.
8. ALL DRIVEWAYS SHALL BE A MINIMUM OF 6" IN THICKNESS AND SHALL BE WITH REINFORCEMENT. DRIVEWAYS MAY BE CONSTRUCTED THICKER THAN 6" WITH 6"X12" W4–W4 WELDED WIRE FABRIC WHEN PROPERLY AUTHORIZED BY THE PROPERTY OWNER WITH THE ENGINEERS CONCURRENCE. NO EXTRA PAYMENT WILL BE MADE FOR DRIVEWAYS THICKER THAN 6".
9. OPTIMUM DRIVEWAY ELEVATIONS SHOWN IN THE TABLES ARE TO BE USED WHEREVER POSSIBLE. ABSOLUTE MAXIMUM AND MINIMUM ELEVATIONS ARE TO BE USED ONLY WHEN THESE VALUES WILL PERMIT NEW CONSTRUCTION TO MATCH EXISTING DRIVES OR PARKING LOTS. VALUES SHOWN IN THE TABLES ARE BASED ON A FULL CURB HEIGHT ELEVATION OF 0.55' ABOVE THE GUTTER FLOW LINE AND MUST BE ADJUSTED ACCORDINGLY FOR OTHER CURB HEIGHTS. VALUES SHOWN IN THE TABLES WITH MINUS SIGNS INDICATE ELEVATIONS BELOW TOP OF FULL HEIGHT CURB.

STANDARD DRIVE ENTRANCES

FULL HEIGHT CURB

SCALE: 1" – 5'

City of Wichita, Kansas

Project Number

472–76–245–83370

5

4.3

F:\Eng\WELDS_GPA\greenwich\details\Stddrv1.dwg Mon Jul 16 15:03:19 2001