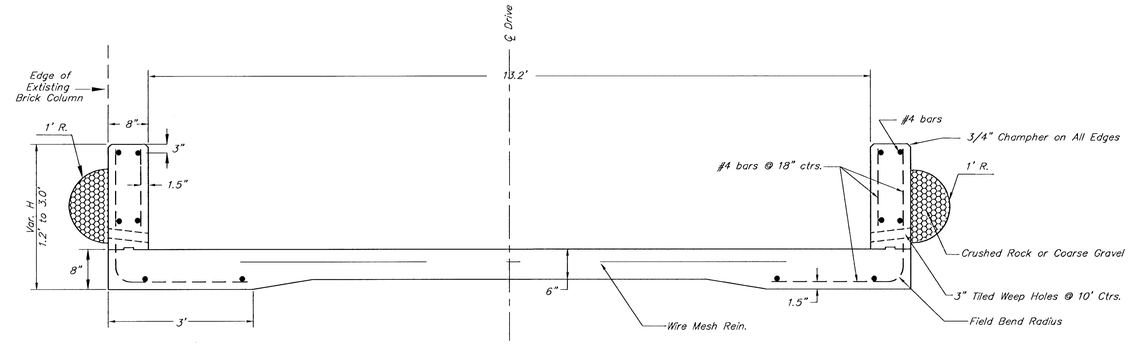

DRIVE RETAINING WALL DETAIL
For Driveway at Sta.42+27.48 Rt.

NOTE: All Excavation, thickened concrete edge, reinforcing steel and wall concrete shall be included in the bid price per linear ft. of "Drive Retaining Wall." The 4" tile weep holes and crushed rock or coarse gravel for drainage shall be INCIDENTAL to the bid item linear ft. of "Drive Retaining Wall."

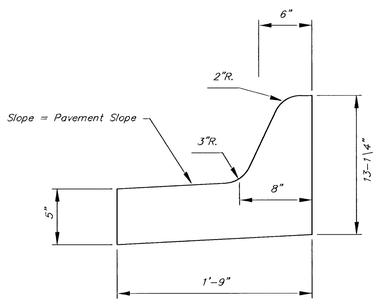

MEDIAL CURB DETAIL (8")
(Low Edge)

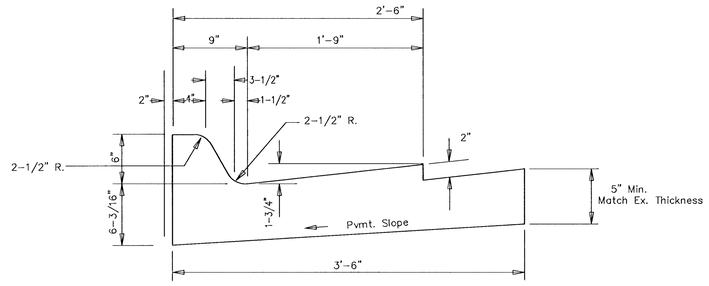

SPECIAL TYPE I
COMBINED CURB & GUTTER – (6")
Sta. 44+65.00 to Sta. 45+44.00

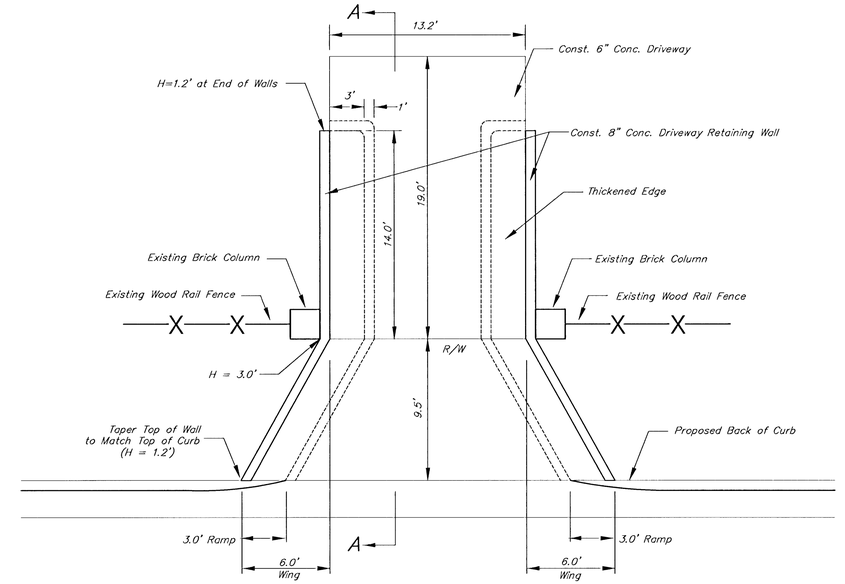

DRIVEWAY DETAIL
Sta. 42+27.48 Rt.

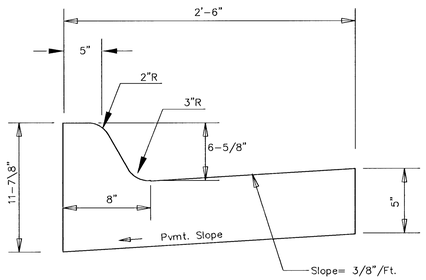

STD. COMBINED
CURB & GUTTER – (6-5/8")

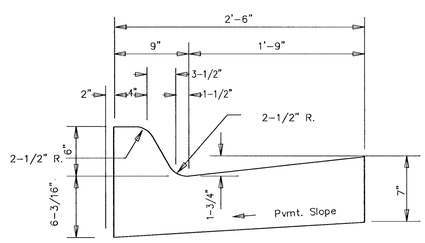

TYPE I COMBINED
CURB & GUTTER – (6")

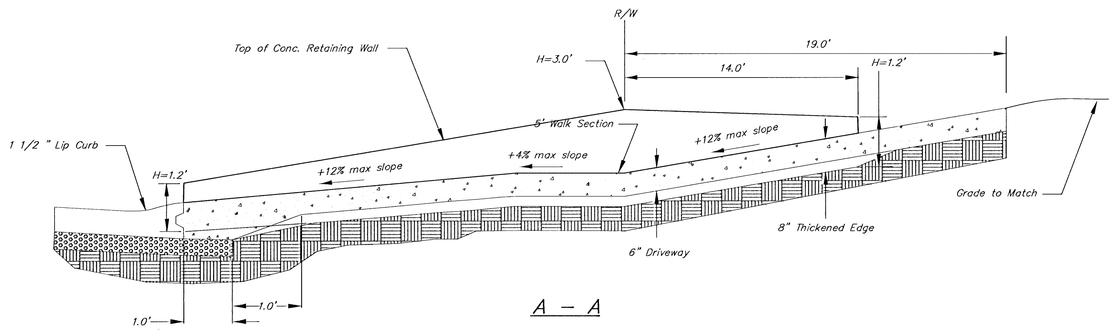

A – A

PROJECT NUMBER			SHEET NAME	ENGINEERING DIRECTORY	
472 - 83370			Curbdet	Kelog_gr\Greenwich\details	
DESIGN	DRAWN	APPROVED	DATE	SCALE	BAUGHMAN NO
KK/JFB	STAFF	KK	July 01	NONE	01 06 E045

ONE KELLOGG PLACE 2ND ADDITION
RETAINING WALL & CURB DETAILS
GREENWICH ROAD FROM GILBERT TO KELLOGG AVE.

BAUGHMAN COMPANY, P.A.
ENGINEERING, SURVEYING, & PLANNING
316-262-7271 • 315 ELLIS • WICHITA, KANSAS 67211

SHEET 6 OF 43

F:\Eng\KELLOG_GR\greenwich\details\curbdet.dwg Mon Jul 16 19:09:46 2001