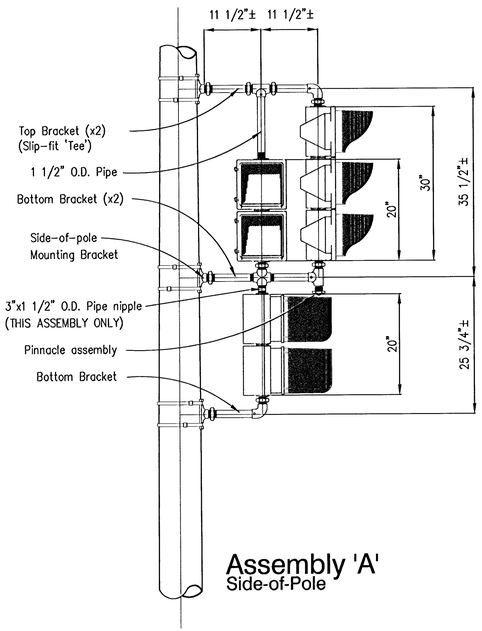

Assembly 'A'
Side-of-Pole

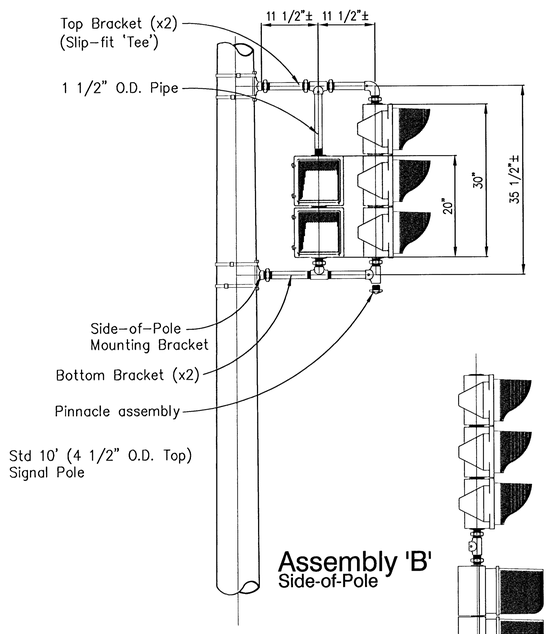

Assembly 'B'
Side-of-Pole

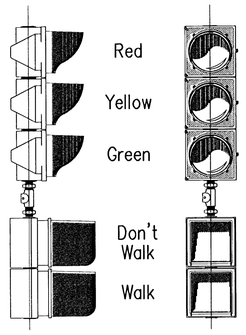

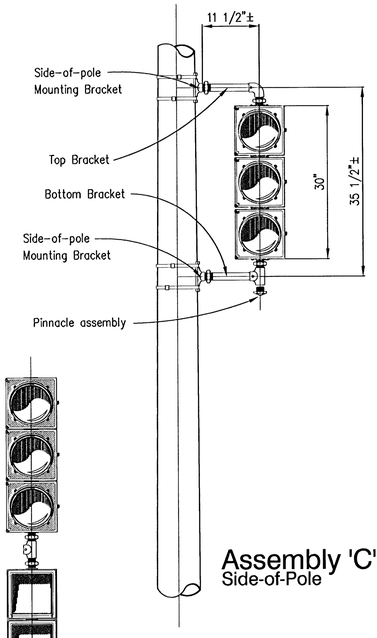

Assembly 'C'
Side-of-Pole

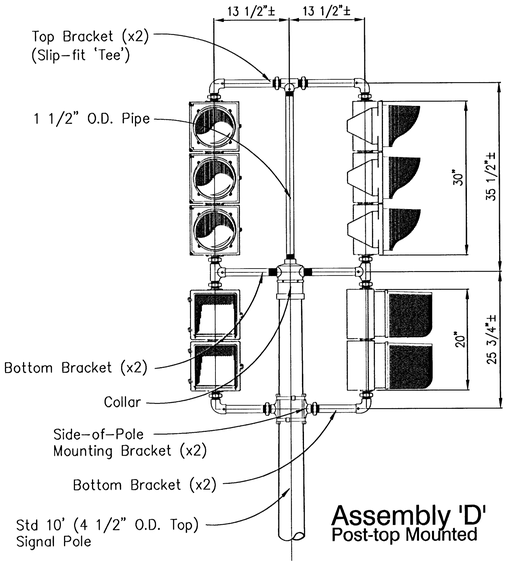

Assembly 'D'
Post-top Mounted

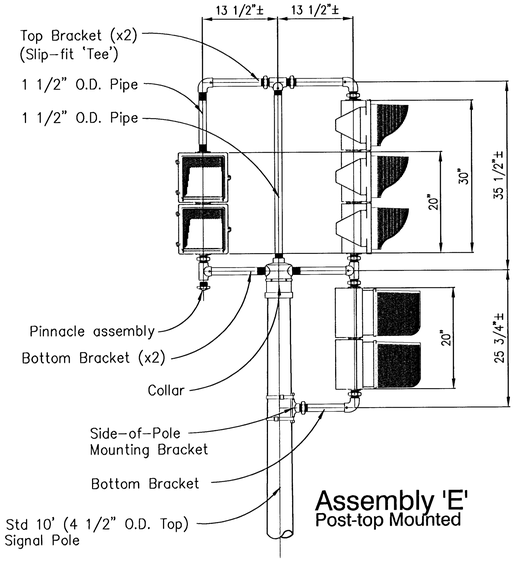

Assembly 'E'
Post-top Mounted

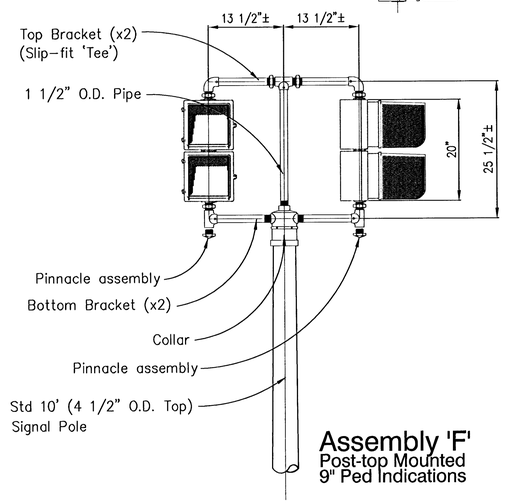

Assembly 'F'
Post-top Mounted
9" Ped Indications

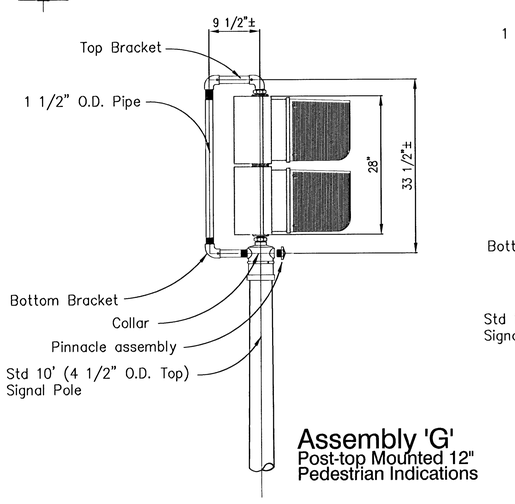

Assembly 'G'
Post-top Mounted 12"
Pedestrian Indications

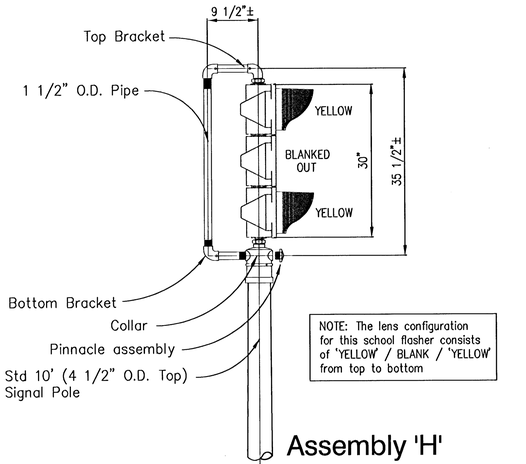

NOTE: The lens configuration for this school flasher consists of 'YELLOW' / BLANK / 'YELLOW' from top to bottom

Assembly 'H'
Std Variable Message Advance
Warning Beacon Assembly

NOTE: All dimensions on this sheet are based on Std 8" lens, 3-section signal with 9" pedestrian indications. DO NOT SCALE. For information ONLY.

PROJECT NUMBER	SHEET NAME	ENGINEERING DIRECTORY
472 - 83370	SIGNALS	Kellog_Gr\Greenwich\Traffic

DESIGN	DRAWN	APPROVED	DATE	SCALE	BAUGHMAN NO
C.O.W.	Sonny		27SEPT95	NONE	01-06-E045

THE CITY OF WICHITA, KANSAS
TYPICAL BRACKET ASSEMBLY DETAILS
SIDE of POLE & POST TOP MOUNTED SIGNALS

BAUGHMAN COMPANY, P.A.
ENGINEERING, SURVEYING, & PLANNING
316-262-7271 • 315 ELLIS • WICHITA, KANSAS 67211

F:\Eng\WELDS_GR\greenwich\traffic\signals.dwg Mon Jul 16 21:50:12 2001