POWER POLE DETAILS

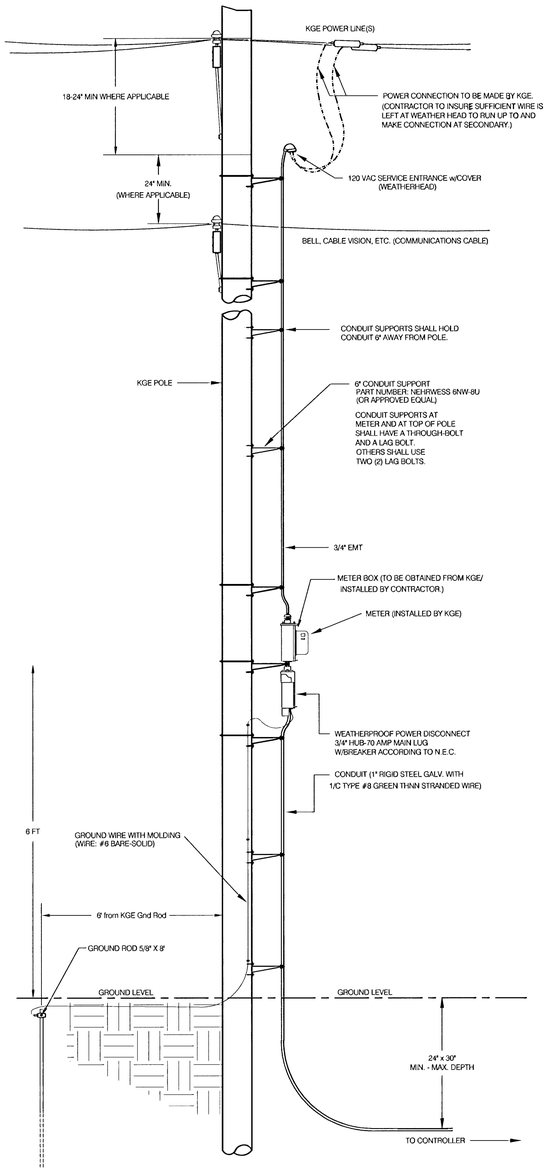

REV. DATE	COMMENTS	INT.
7/09	Conduit Support / Gnd Rod at 1.6m Hole	LNB

SPANWIRE ASSEMBLY DETAILS

1. MAX. SAG = 5% OF SPAN.
2. STANDARD BACKRAKE = 1.5°
3. HEIGHT OF STRAIN WIRE HOOK-UP TO BE DETERMINED BY FIELD ENGINEER. TRAFFIC SIGNAL CABLE TO BE SECURED TO STRAIN (SPAN) WIRE WEATHERABLE NYLON CABLE HANGERS (12" CTR.) DETAIL 'B'
4. TETHER CLAMP TO BE DESIGNED TO RELEASE UNDER 'HIGH WIND LOAD' TO PERMINT SIGNAL 'FREE SWING'.

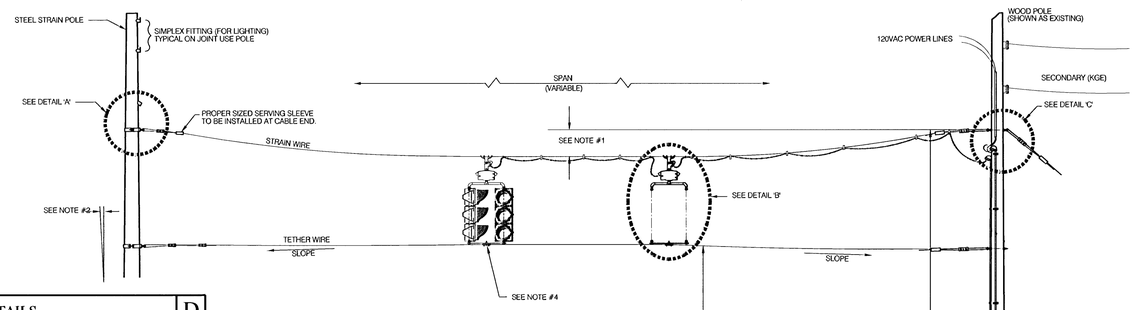

METER BOX & POWER DISCONNECT DETAILS

D

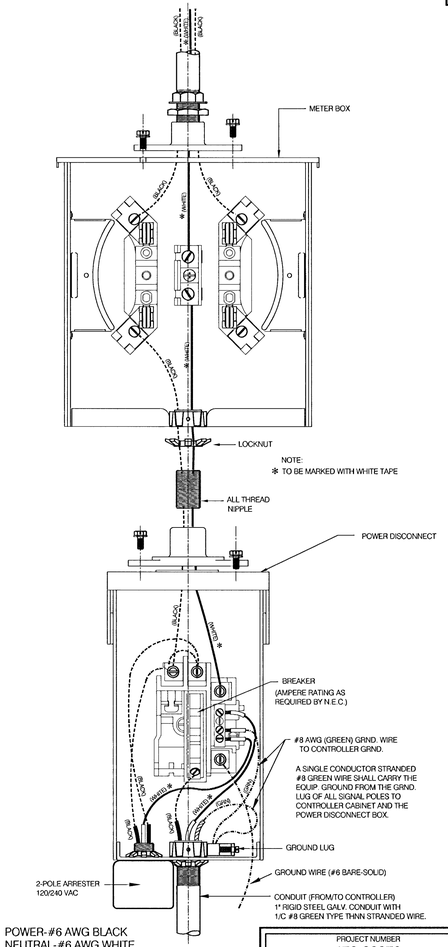

POWER-#6 AWG BLACK
NEUTRAL-#6 AWG WHITE
GROUND-#8 AWG GREEN

A STRAIN POLE ASSEMBLY

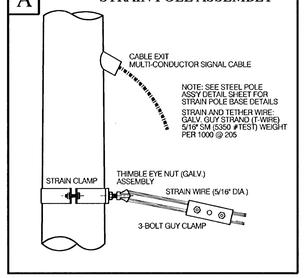

B SIGNAL BRACKET ASSEMBLY DETAILS

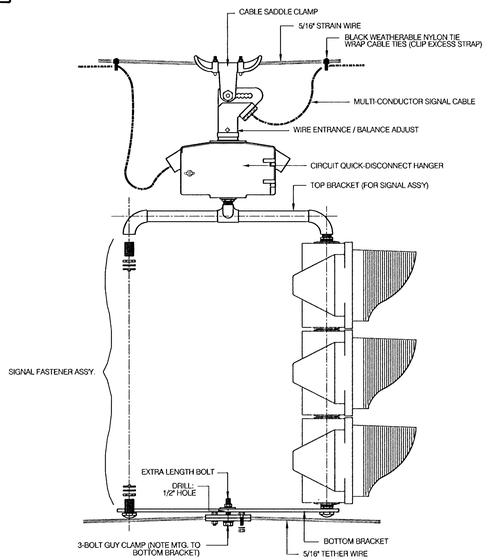

C WOOD POLE ASSEMBLY DETAILS

(KGE POLE EXCLUDED)

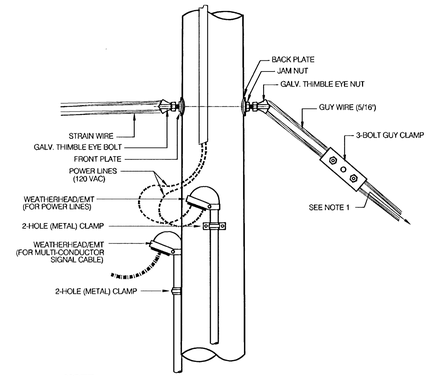

NOTE:
1. GALV. THIMBLE EYE ANCHOR BOLT AND EXPANDING ANCHOR (NOT SHOWN) TO STABILIZE WOOD POLE (WHERE APPLICABLE)
2. ANY COMBINATION OF ROUND/THIMBLE EYE BOLTS AND NUTS MAY BE UTILIZED AS APPLICATION MAY VARY. FIELD ENGINEER TO DETERMINE TYPE OF HARDWARE USED.
3. HARDWARE SHOWN IS TRANSFERRABLE TO STEEL POLE IN WHOLE OF PART WHERE STEEL STRAIN POLE IS USED. (POWER; SIGNAL CABLE; METER, ETC.) FIELD ENGINEER TO MAKE DETERMINATION. STEEL STRAIN POLE APPLICATIONS MAY VARY AS TO MOUNTING ON POLE; USE OF CLAMPS, BANDED BRACKETS, ETC. ARE STD. - FIELD ENGINEER TO DETERMINE BEST TYPE APPLICATIONS.

CITY OF WICHITA
DEPARTMENT OF PUBLIC WORKS
DIVISION OF TRAFFIC ENGINEERING
PAUL GUNZELMAN, P.E. — TRAFFIC ENGINEER

PROJECT NUMBER	SHEET NAME	ENGINEERING DIRECTORY
472-83370	PPSP-DTL	kelog_gr\greenwich\traffic

DESIGN	DRAWN	APPROVED	DATE	SCALE	BAUGHMAN NO
SONNY	STAFF		June 2001	NONE	01-06-E045

POWER POLE & SPAN POLE STANDARD DETAILS

One Kellogg Place 2nd Addition

BAUGHMAN COMPANY, P.A.
ENGINEERING, SURVEYING, & PLANNING
316-262-7271 • 315 ELLIS • WICHITA, KANSAS 67211

SHEET 23 OF 43

F:\Eng\KELOG_GR\greenwich\traffic\PPSP-dtl.dwg Mon Jul 16 22:23:16 2001