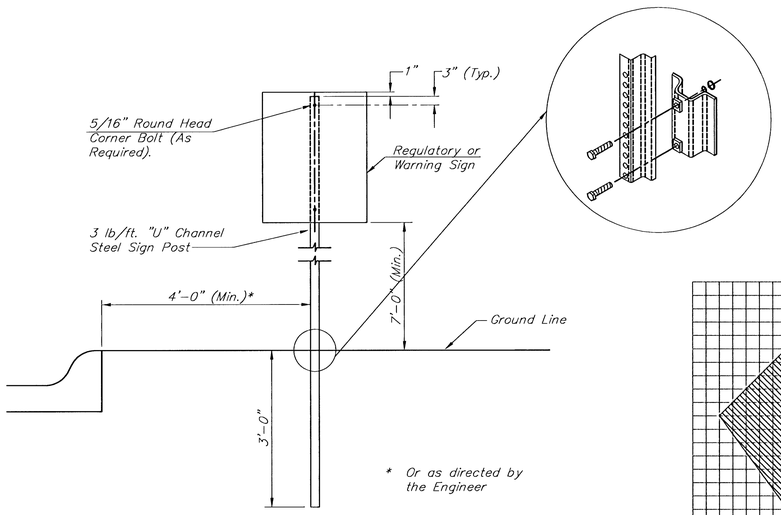

Typical Traffic Control Sign Mounting Installation
Curb and Gutter Section

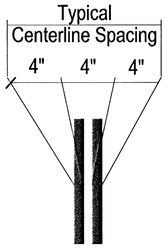

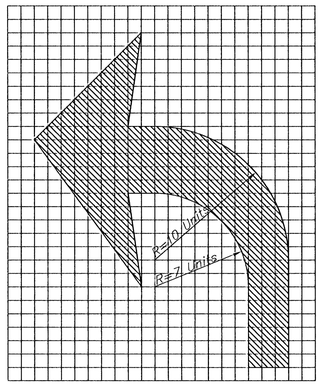

Symbol Detail

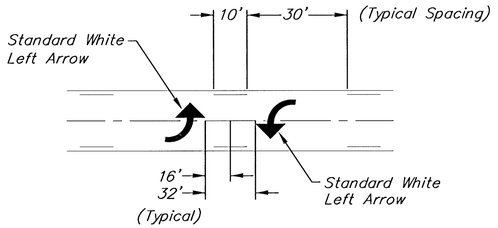

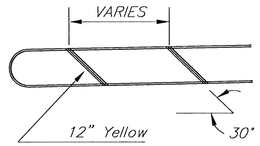

FOR INFORMATION ONLY

SIGNING QUANTITIES THIS PROJECT				
TYPE	SIGN FACE DESCRIPTION	SIZE	INSTALL	QUANTITY
R2-1	SPEED LIMIT (40)	24" x 30"	X	2
R3-9B	DUAL OPPOSING LEFT TURNS	24" x 36"	X	2
W9-1	RIGHT LANE ENDS	36" x 36"	X	1
W4-2R	LANE REDUCTION TRANSITION	36" x 36"	X	1
R4-7	KEEP RIGHT	24" x 30"	X	2
OM-1	OBJECT MARKER	18" x 18"	X	2

GENERAL NOTES - SIGNING

NOTE: References below to "Standard Specifications" denote "Standard Specifications for State Road and Bridge Construction, Edition 1990" by the Kansas Department of Transportation.

1. Post Anchors. Posts shall be anchored with a yielding base post support as detailed.
2. Posts for traffic control signs. Posts shall conform to the requirements of subsection 1620 of the standard specifications except that all posts shall weigh 3 lbs./foot minimum.
3. Sign blanks for traffic control signs. Sign blanks shall be fabricated from 0.080" aluminum alloy 6063-T6 conforming to the requirements of subsection 1626 of the standard specifications.
4. Fasteners. All steel fasteners for traffic control signs shall be galvanized and shall conform to the requirements of subsection 1614 of the standard specifications.
5. Reflective sheeting. Reflective sheeting shall be type II - High performance class HA in accordance with subsection 2201 of the standard specifications.
6. Process ink. All process ink shall conform to the requirements of subsection 2202 of the standard specifications.
7. Details. Regulatory and warning signs shall conform to the details in "Standard Highway Signs", FHWA 1979.
8. New traffic control and street name signs. New traffic control and street name signs shall be measured and paid for at the lump sum price for signing. The payment as set forth above shall be considered full compensation for all excavation, backfilling, posts, anchors, fasteners, materials, labor, tools, and incidentals necessary to complete this work.

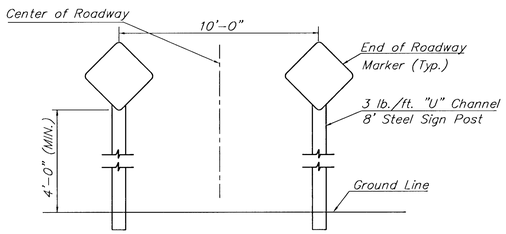

Typical End of Roadway Sign Mounting Installation

FOR INFORMATION ONLY

BILL OF MARKING MATERIALS		
ITEMS	TOTAL	UNITS
PLASTIC MARKING (4" WHITE)	760'	LF
PLASTIC MARKING (6" WHITE)	710'	LF
PLASTIC MARKING (24" WHITE)	95'	LF
PLASTIC MARKING (4" YELLOW)	3275'	LF
PLASTIC MARKING (6" YELLOW)	65'	LF
PLASTIC MARKING (12" YELLOW)	110'	LF
PLASTIC MARKING (WHITE LEFT ARROW)	3	EACH
PLASTIC MARKING (WHITE RIGHT ARROW)	0	EACH

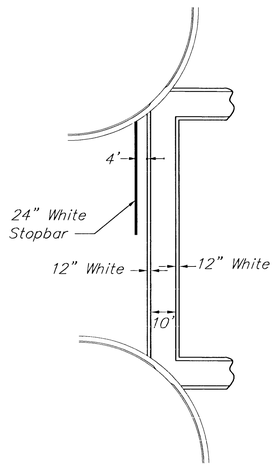

Typical Crosswalk Detail

Typical Street Signing

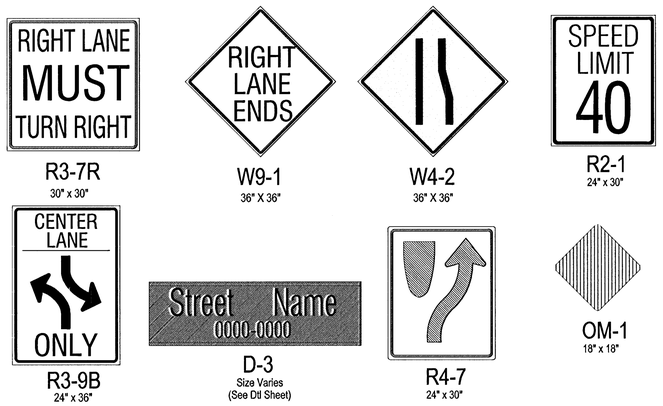

GENERAL NOTES - MARKING

1. All pavement markings shall conform to the current standards set forth in the latest publication of the "Manual on Uniform Traffic Control Devices".
2. All pavement markings shall be the 'Cold-laid Plastic Tape' type or Thermoplastic type, (white and yellow), meeting the required specifications of the Engineering Division, City of Wichita, Kansas.
3. Installation of marking tapes on other than new asphaltic concrete pavement (i.e. concrete pavements; existing A.C. surfaces, etc.) shall be accomplished in accordance with installation specifications for cold-laid markings.
4. Where new asphaltic concrete pavement is being constructed, the new pavement markings must be installed while the new wearing surface is still warm (at least 130F) and rolled, so as to inlay the pavement markings into the new pavement surface. (Applies to cold-laid marking tapes only.)

PROJECT NUMBER	SHEET NAME	ENGINEERING DIRECTORY	ONE KELLOGG PLACE 2ND ADDN	BAUGHMAN COMPANY, P.A.	SHEET
472 - 83370	TYPDTL	F:\\Kelog_gr\Greenwich\Traffic	MARKING & SIGNING DETAIL	ENGINEERING, SURVEYING, & PLANNING	25 OF 43
DESIGN: JFB / DRAWN: STAFF / APPROVED: JFB / DATE: JUNE01 / SCALE: USER / BAUGHMAN NO: 01 06 E045			GREENWICH ROAD FROM GILBERT TO KELLOGG AVE	316-262-7271 * 315 ELLIS * WICHITA, KANSAS 67211	

F:\Eng\KELOG_GR\greenwich\traffic\Typdtl.dwg Mon Jul 16 22:56:53 2001