83246

CONSTRUCTION PLANS FOR

LATERAL 34, MAIN 24

OF THE

WAR INDUSTRIES SEWER

IN

THE CITY OF WICHITA,

SEDGWICK COUNTY, KANSAS

MICHAEL E. LINDEBAK, P.E.- CITY ENGINEER

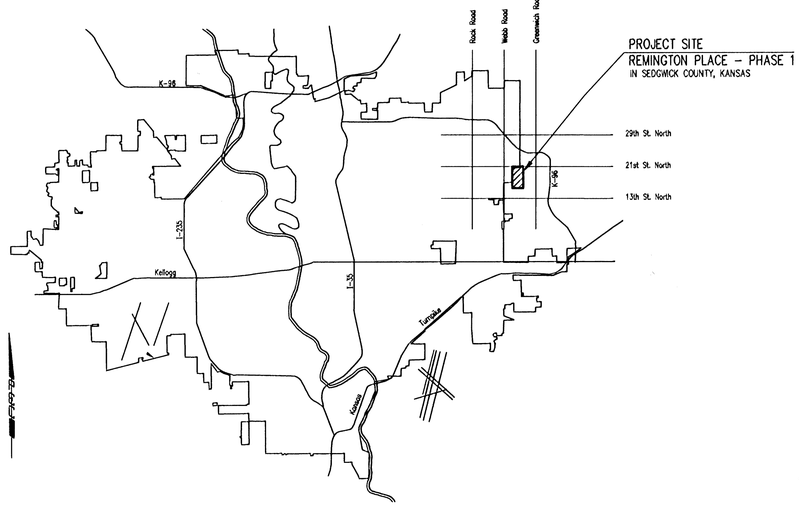

LOCATION MAP

INDEX OF SHEETS

SHEET NO. 1	TITLE SHEET
SHEET NO. 2	KEY MAP AND GENERAL NOTES
SHEET NO. 3-6	PLATS
SHEET NO. 7-12	PLAN/PROFILE
SHEET NO. 13	TYPE "P" MANHOLE DETAILS
SHEET NO. 14	FRAME & COVER DETAILS
SHEET NO. 15	RISER DETAILS
SHEET NO. 16-19	SOIL EROSION BMP DETAILS

Booked
P. 215
P. 216
RDL
4/11/02

OCA NO. 743885

CITY OF WICHITA PROJECT NO. 468-83246

AUGUST 2001

PLANS PREPARED BY

PROFESSIONAL ENGINEERING CONSULTANTS, P.A.

ENGINEERS

WICHITA, KANSAS

MICHAEL D. KEARNEY
LICENSED
13944
8/27/01
KANSAS
PROFESSIONAL ENGINEER

RECORD DRAWING
29 MAR 02

DSNR: WDK OPER: TLS SCALE: 1=1.00
Q:\2001\01158\002\cadfile 08-24-2001 02:37:21 pm

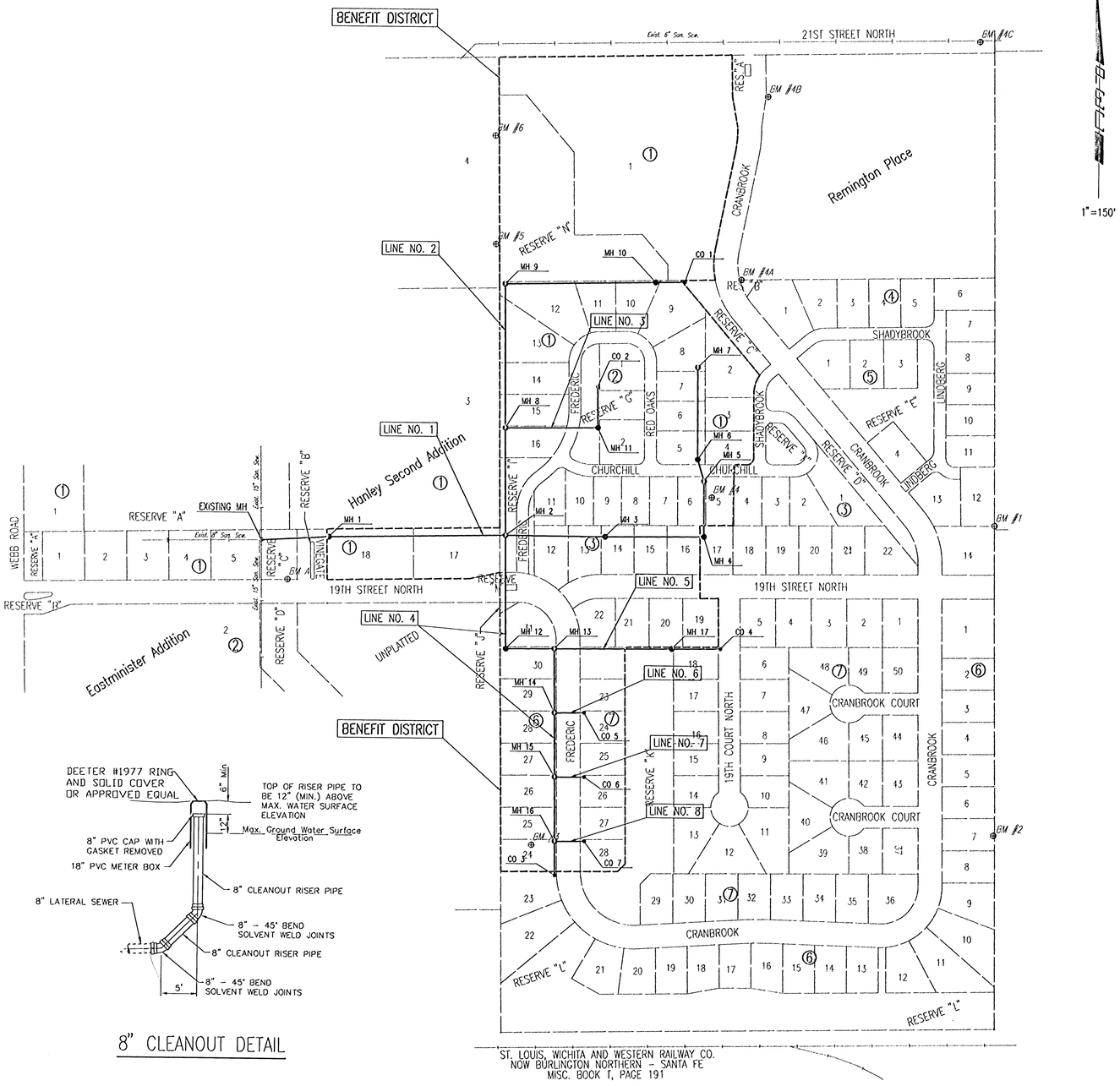

1"=150'

8" CLEANOUT DETAIL

GENERAL NOTES

1. ALL CONSTRUCTION AND MATERIALS TO COMPLY WITH CITY OF WICHITA SPECIFICATIONS AND STANDARDS.
2. ALL ELEVATIONS SHOWN ARE BASED ON CITY OF WICHITA DATUM.
3. THE CONTRACTOR SHALL LIMIT THE EXTENT OF TRENCH TO REMAIN OPEN OVERNIGHT AND WEEKENDS TO LESS THAN 50 FEET.
4. AT LEAST 72 HOURS PRIOR TO BEGINNING EXCAVATION (EXCLUDING WEEKENDS AND HOLIDAYS), THE CONTRACTOR SHALL CONTACT THE KANSAS ONE-CALL SYSTEM, A UTILITY LOCATION SERVICE, AT (316) 687-2470 TO REQUEST THE LOCAL UTILITY COMPANIES MARK ANY EXISTING LINES WITHIN THE PROJECT AREA.
5. UNDERGROUND UTILITY SERVICE LINES AND OVERHEAD UTILITY POLE LINES ARE TO BE ADJUSTED AS NECESSARY BY OTHERS PRIOR TO CONSTRUCTION UNLESS THE PLANS SPECIFICALLY CALL FOR THEIR ADJUSTMENT BY THE CONTRACTOR OR UNLESS THE PLANS SPECIFICALLY IDENTIFY A UTILITY TO BE ADJUSTED BY ITS OWNER DURING CONSTRUCTION. EXISTING UTILITIES AND THEIR LOCATIONS, AS SHOWN ON THE PLANS, REPRESENT THE BEST INFORMATION OBTAINABLE FOR THE DESIGN. THE CONTRACTOR WILL BE REQUIRED TO WORK AROUND EXISTING UTILITIES WITHIN THE RIGHT-OF-WAY WHICH DO NOT CONFLICT WITH PROPOSED CONSTRUCTION.
6. THE CONTRACTOR SHALL BE RESPONSIBLE FOR PRESERVING PROPERTY IRONS. THE CONTRACTOR WILL BE REQUIRED TO RE-ESTABLISH ANY PROPERTY IRONS WHICH ARE DAMAGED OR DESTROYED BY HIS CONSTRUCTION OPERATIONS. SUCH IRONS SHALL BE RE-ESTABLISHED BY A LICENSED LAND SURVEYOR IN ACCORDANCE WITH STATE LAWS. ALL COSTS FOR THIS WORK SHALL BE SUBSIDIARY TO THE LUMP SUM PRICE BID FOR "SITE RESTORATION".
7. CONTRACTOR SHALL PROVIDE POSITIVE DRAINAGE AWAY FROM ALL MANHOLE COVERS.
8. MANHOLES SHALL BE TYPE "P" MANHOLES. MANHOLES SHALL BE CONSTRUCTED IN ACCORDANCE WITH THE STANDARD SPECIFICATIONS AND THE STANDARD DETAIL DRAWINGS.
9. ALL LAWN/TURF AREAS DISTURBED BY CONSTRUCTION OF THE PROPOSED IMPROVEMENTS SHALL BE RESTORED WITH THE SAME GRASS/SOD AS EXISTING. RESTORATION OF DISTURBED AREAS SHALL INCLUDE, BUT NOT BE LIMITED TO, TOP SOIL PREPARATION, SEEDING, MULCH, AND/OR RESEEDING. ALL SEEDING/SODDING WORK SHALL BE IN ACCORDANCE WITH THE CITY OF WICHITA STANDARD SPECIFICATIONS AND THE CITY OF WICHITA ADMINISTRATIVE REGULATION NO. A878 WHICH GOVERNS CLEANUP AND RESTORATION OR REPLACEMENT FOLLOWING CONSTRUCTION. ALL COSTS FOR THIS WORK SHALL BE SUBSIDIARY TO THE LUMP SUM PRICE BID FOR "SITE RESTORATION".
10. RUBBLE FROM THE REMOVAL OF MISCELLANEOUS STRUCTURES INCLUDING ANY TREES REMOVED, TREE TRIMMINGS, AND EXCESS EXCAVATION WHICH IS TO BE WASTED SHALL BE DISPOSED OF ON SITES PROVIDED BY THE CONTRACTOR. THESE SITES SHALL ALSO BE APPROVED BY THE ENGINEER AS TO SUITABILITY, APPEARANCE, AND SITE LOCATION. LOCATIONS THAT, IN THE OPINION OF THE ENGINEER, WILL LEAVE AN UNSIGHTLY APPEARANCE WILL NOT BE APPROVED. ALL DISPOSAL SITES MUST BE APPROVED BY THE KANSAS DEPARTMENT OF HEALTH AND ENVIRONMENT. MATERIAL EITHER STOCKPILED OR DISPOSED OF IN A FLOOD PLAIN WILL REQUIRE A KANSAS STATE BOARD OF AGRICULTURE PERMIT. ANY MATERIAL DUMPED IN WATERS OF THE UNITED STATES OR WETLANDS IS SUBJECT TO U.S. CORPS. OF ENGINEERS PERMITTING REGULATIONS. ANY MATERIAL BURIED OR STOCKPILED BEYOND APPROVED CONSTRUCTION LIMITS MAY REQUIRE ARCHAEOLOGICAL INVESTIGATIONS UNLESS BURIED IN A PREVIOUSLY APPROVED DISPOSAL LOCATION.
11. THE CONTRACTOR SHALL PREVENT ANY CONSTRUCTION DEBRIS FROM ENTERING THE EXISTING SANITARY SEWER DURING CONSTRUCTION.
12. THE CONTRACTOR SHALL GIVE ALL PROPERTY OWNERS AND/OR TENANTS OF DEVELOPED PROPERTY ABUTTING THE CONSTRUCTION OF THIS PROJECT A MINIMUM OF TEN (10) DAYS ADVANCE NOTICE PRIOR TO START OF CONSTRUCTION.
13. ALL APPROVED EXCESS EXCAVATION WHICH IS TO BE WASTED SHALL BE STOCKPILED WITHIN REMINGTON PLACE AT NO ADDITIONAL COST TO THE OWNER. STOCKPILE LOCATIONS SHALL BE AS DIRECTED BY THE OWNER AND IN ACCORDANCE WITH GENERAL NOTE NO. 10 ABOVE.
14. CONTRACTOR IS REQUIRED TO MAINTAIN CONTINUOUS FLOW OF SEWAGE IN EXISTING MAINS AT ALL TIMES.
15. THE CONTRACTOR SHALL SEED ALL AREAS DISTURBED BY CONSTRUCTION ACTIVITIES WITH TEMPORARY RYE GRASS. RYE GRASS SEED SHALL BE PLANTED AT A MINIMUM RATE OF SIX (6) POUNDS PER ONE THOUSAND (1,000) SQUARE FEET. THIS TEMPORARY SEEDING MAY BE OMITTED ONLY IF OTHER SEEDING IS REQUIRED IN ACCORDANCE WITH GENERAL NOTE NO. 9 ABOVE. TEMPORARY SEEDING OR PERMANENT SEEDING/SODDING SHALL BE APPLIED WITHIN 14 DAYS AFTER THE AREA HAS BEEN DISTURBED.
16. THE CONTRACTOR SHALL NOT BURY MANHOLES THAT HAVE RIM ELEVATIONS WHICH ARE LOWER THAN EXISTING GROUND AT THE MANHOLE. THE GROUND AROUND SUCH MANHOLES AND ALONG THE SEWER ALIGNMENT SHALL BE BACKFILLED TO THE APPROXIMATE ELEVATION OF THE PROPOSED GROUND ELEVATION SHOWN ON THE PLAN/PROFILE SHEETS. THE CONTRACTOR SHALL PROVIDE DRAINAGE AWAY FROM THESE MANHOLES AND SEWER LINES BY CONSTRUCTION OF TEMPORARY DITCHES OR SLOPING THE GROUND AS REQUIRED. ALL COSTS FOR THIS WORK SHALL BE CONSIDERED SUBSIDIARY TO THE INSTALLED BID PRICE FOR MANHOLES OR PIPE.
17. THE CONTRACTOR SHALL PROVIDE MOUNDED EARTH AT MANHOLES AND CLEANOUTS THAT HAVE TOP ELEVATIONS GREATER THAN 1 FOOT ABOVE EXISTING GRADE, AS SHOWN ON THE PLANS. COSTS FOR MOUNDING SHALL BE CONSIDERED SUBSIDIARY TO THE INSTALLED BID PRICE FOR MANHOLES.
18. INTERURBAN TRAFFIC GENERATED OUTSIDE THE PROJECT AREA AND LOCAL BUSINESS OR RESIDENTIAL TRAFFIC GENERATED WITHIN THE PROJECT AREA ARE TO BE DISCOURAGED THROUGH CONSTRUCTION AS FURTHER PROMULGATED BY PROJECT SPECIAL PROVISIONS.
19. THE CONTRACTOR SHALL AVOID REMOVAL OR TRIMMING OF ANY TREES OR SHRUBS WHERE POSSIBLE. WHERE THE CONTRACTOR BELIEVES THE REMOVAL OR TRIMMING IS UNAVOIDABLE, HE SHALL COORDINATE SUCH WORK WITH THE ENGINEER. COSTS FOR TREE/SHRUB REMOVAL AND TRIMMING REGARDLESS OF SIZE SHALL BE CONSIDERED SUBSIDIARY TO THE LUMP SUM PRICE BID FOR "SITE CLEARING".

BENCHMARK LIST

BM #1 -"I" POST IN EAST-WEST TREE ROW NEAR THE SOUTH EAST CORNER OF LOT 12, BLOCK 4, REMINGTON PLACE.
ELEV. = 205.425

BM #2 -"I" POST 40' NORTH AND 6' WEST OF THE SOUTH EAST CORNER OF LOT 7, BLOCK 6, REMINGTON PLACE.
ELEV. = 209.455

BM #3 -"I" POST 75' WEST AND 15' SOUTH OF THE SOUTH EAST CORNER OF LOT 25, BLOCK 6, REMINGTON PLACE.
ELEV. = 204.18

BM #4 -"I" POST 75' NORTH AND 12' EAST OF THE SOUTH EAST CORNER OF LOT 6, BLOCK 3, REMINGTON PLACE.
ELEV. = 210.405

BM #4-A -"I" POST 5' EAST OF THE NORTH WEST CORNER OF LOT 1, BLOCK 4, REMINGTON PLACE.
ELEV. = 210.06

BM #4-B -"I" POST 5' EAST OF THE EAST RIGHT-OF-WAY OF CRANBROOK AND 110' SOUTH OF THE SOUTH RIGHT-OF-WAY OF 21ST STREET.
ELEV. = 209.56

BM #4-C -CHISELED "d" IN THE CENTER OF CURB INLET ON THE SOUTH CURB LINE OF 21ST STREET, 50' WEST OF THE NORTH 1/4 CORNER OF SECTION 9, 12'S R2E.
ELEV. = 195.385

BM "A" -CHISELED "d" ON THE EAST END OF A RCB HEADWALL ON THE NORTH WEST CORNER OF 19TH STREET AND VINE GATE INTERSECTION.
ELEV. = 193.84

BM #5 -CHISELED "d" ON THE TOP OF CURB AT THE NORTH EAST CORNER OF A UTILITY SHED, 110' NORTH AND 10.5' WEST OF THE NORTH EAST CORNER OF LOT 12, BLOCK 1, REMINGTON PLACE.
ELEV. = 204.39

BM #6 -CHISELED "+" ON TOP OF CURB AT THE PI AT THE NORTH EAST CORNER OF THE PARKING LOT OF APPARTMENT COMPLEX, 200' SOUTH AND 6.9' WEST OF THE NORTH WEST CORNER OF LOT 1, BLOCK 1, REMINGTON PLACE.
ELEV. = 208.80

RECORD DRAWING
25 MAR 02

No.	Revision	By	Date

LATERAL 34, MAIN 24, OF THE WAR INDUSTRIES SEWER

KEY MAP AND GENERAL NOTES

MICHAEL E. LINDEBAK, P.E.- CITY ENGINEER
CITY OF WICHITA PROJECT NO. 468-83246

Professional Engineering Consultants, P.A.
303 S. TOPEKA • WICHITA, KANSAS 67202
316-262-2691 • FAX 316-262-3003

Designed by MDK | Job No. 34-01158-2 | Sht. 2 of 19
Drawn by CSL | Date March 2001

MICHAEL P. KELLY 13944 KANSAS PROFESSIONAL ENGINEER 2/28/01

DSNR: MDK OPER: JGA SCALE: 1=150.00
Q:\2001\01158\002\sskeymap 08-28-2001 02:09:21 pm

REMINGTON PLACE

AN ADDITION TO WICHITA, SEDGWICK COUNTY, KANSAS

North 1/4 Corner, Sec. 9, 12S, R2E of the 6th P.M. Found 1/2" Rebar

Center Sec. 9, 12S, R2E of the 6th P.M. Found 1/2" Iron Pipe

SW Corner, East 1/2, NW 1/4, Sec. 9, 12S, R2E of the 6th P.M. Set 3/4" Iron Pipe

NW Corner, East 1/2, NW 1/4, Sec. 9, 12S, R2E of the 6th P.M. Found 5/8" Rebar

West 1/4 Corner, Sec. 9, 12S, R2E of the 6th P.M. Found 1" Bar in Thimble

NW Corner, Sec. 9, 12S, R2E of the 6th P.M. Found 1/2" Iron Pipe in Thimble

West 1/4 Corner, Sec. 9, 12S, R2E of the 6th P.M. Found 1" Bar in Thimble

Found 5/8" Rebar w/MKEC Cap

Northeast Corner Reserve "O", Eastminster Addition

Found 5/8" Rebar w/MKEC Cap

South Line Lot 3, block 1, Hanley Second Addition

SEE SHEET 4 OF 15

SEE SHEET 4 OF 15

21ST STREET NORTH

19TH STREET NORTH

19TH COURT NORTH

LINDBERG

SHADYBROOK

CRANBROOK

CRANBROOK COURT

CHURCHILL

RED OAKS

FREDERIC

VINEGATE

WEBB ROAD

RESERVE "A"

RESERVE "B"

RESERVE "C"

RESERVE "D"

RESERVE "E"

RESERVE "F"

RESERVE "G"

RESERVE "H"

RESERVE "I"

RESERVE "J"

RESERVE "K"

RESERVE "L"

RESERVE "M" (15' x 30')

RESERVE "N"

150' Drainage Easement (By Separate instrument)

20' Utility & Drainage Easement (By Separate instrument)

5' Wall Easement

40' Cooperative Refinery Association Esm't. (Misc. Bk. 500, Pg. 470 & Bk. 239, Pg. 589)

(Now Farmland Industries) 40' Cooperative Refinery Association Esm't. (Misc. Book 500, Page 470 & Book 239, Page 589)

ST. LOUIS, WICHITA AND WESTERN RAILWAY CO. NOW BURLINGTON NORTHERN - SANTA FE MISC. BOOK 1, PAGE 191

Misc. Book 594, Page 589

100' KGE Easement

Access Control Except One Opening

SCALE: 1" = 100'

● = 3/4" IRON PIPE W/PEC CAP UNLESS OTHERWISE NOTED
CM = CALCULATED FROM MEASUREMENT
D = DEED DIMENSION

B.M. – CITY OF WICHITA TABLET 39 FEET NORTH OF NORTH 1/4 CORNER SECTION 9, 12S, R2E.
ELEV. = 1316.23 (City Datum)
ELEV. = 1383.63 N.G.V.D.

MINIMUM PAD ELEVATION (LOWEST OPENING)			
LOT NUMBERS	BLOCK	ELEVATION (CITY DATUM)	ELEVATION (N.G.V.D.)
9 thru 14	1	205.7	1393.10
5 and 6	4	198.4	1385.8
1 thru 4	5	209.7	1397.10
11 and 12	6	207.0	1394.40
13 thru 18	6	205.4	1392.80
19 thru 22	6	201.3	1388.70
12 thru 30	7	203.5	1390.90

No.	Revision	By	Date

LATERAL 34, MAIN 24, OF THE WAR INDUSTRIES SEWER

PLAT

MICHAEL E. LINDEBAK, P.E.- CITY ENGINEER
CITY OF WICHITA PROJECT NO. 468-83246

Professional Engineering Consultants, P.A.
303 S. TOPEKA • WICHITA, KANSAS 67202
316-262-2691 • FAX 316-262-3003

Designed by	GLM	Job No.	34-01158-2	SM. 3 of 19
Drawn by	GLM	Date	March 2001	

DSNR: MDK OPER: DLS SCALE: 1=100.00
C:\2001\01158\002\RMPLAT 08-24-2001 01:14:35 pm

REMINGTON PLACE

AN ADDITION TO WICHITA, SEDGWICK COUNTY, KANSAS

SCALE: 1" = 50'

● = 3/4" IRON PIPE W/PEC CAP UNLESS OTHERWISE NOTED

MINIMUM PAD ELEVATION (LOWEST OPENING)			
LOT NUMBERS	BLOCK	ELEVATION (CITY DATUM)	ELEVATION (N.G.V.D.)
9 thru 14	1	205.7	1393.10
5 and 6	4	198.4	1385.8
1 thru 4	5	209.7	1397.10
11 and 12	6	207.0	1394.40
13 thru 18	6	205.4	1392.80
19 thru 22	6	201.3	1388.70
12 thru 30	7	203.5	1390.90

No.	Revision	By	Date

LATERAL 34, MAIN 24, OF THE
WAR INDUSTRIES SEWER

PLAT

MICHAEL E. LINDEBAK, P.E.- CITY ENGINEER
CITY OF WICHITA PROJECT NO. 468-83246

Professional Engineering Consultants, P.A.
303 S. TOPEKA • WICHITA, KANSAS 67202
316-262-2691 • FAX 316-262-3003

Designed by	GLM	Job No.	34-01158-2
Drawn by	GLM	Date	March 2001

Sht. 4 of 19

DSNR: MCK OPER: TLS SCALE: 1=50.00
C:\2001\01158\002\RMPLAT2 06-24-2001 01:15:34 pm

FINAL PLAT OF

HANLEY SECOND ADDITION

AN ADDITION TO WICHITA, SEDGWICK COUNTY, KANSAS

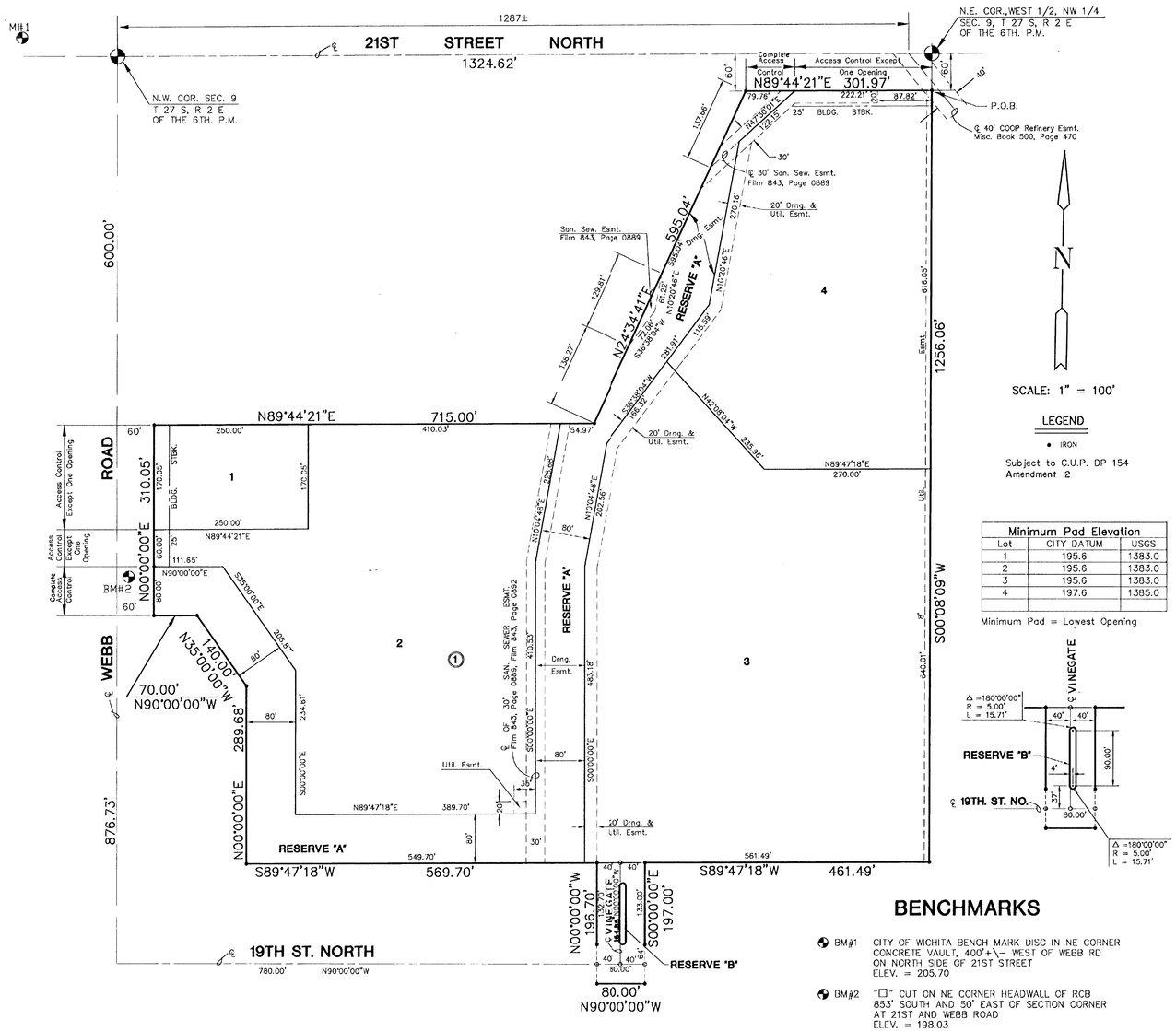

BENCHMARKS

BM#1 CITY OF WICHITA BENCH MARK DISC IN NE CORNER CONCRETE VAULT, 400'+\- WEST OF WEBB RD ON NORTH SIDE OF 21ST STREET
ELEV. = 205.70

BM#2 "□" CUT ON NE CORNER HEADWALL OF RCB 853' SOUTH AND 50' EAST OF SECTION CORNER AT 21ST AND WEBB ROAD
ELEV. = 198.03

No.	Revision	By	Date

LATERAL 34, MAIN 24, OF THE
WAR INDUSTRIES SEWER

PLAT

MICHAEL E. LINDEBAK, P.E.- CITY ENGINEER
CITY OF WICHITA PROJECT NO. 468-83246

Professional Engineering Consultants, P.A.
303 S. TOPEKA • WICHITA, KANSAS 67202
316-262-2691 • FAX 316-262-3003

Designed by MID-KANSAS ENGINEERING CONSULTANTS, INC.
Drawn by MID-KANSAS ENGINEERING CONSULTANTS, INC.
Job No. 34-01158-2
Date March 2001
Sht. 5 of 19

DSNR: MDK OPER: TLS SCALE: 1=100.00
G:\2001\01158\002\HAN2PLAT 08-14-2001 01:55:44 pm

FINAL PLAT OF

EASTMINSTER

AN ADDITION TO WICHITA, SEDGWICK COUNTY, KANSAS

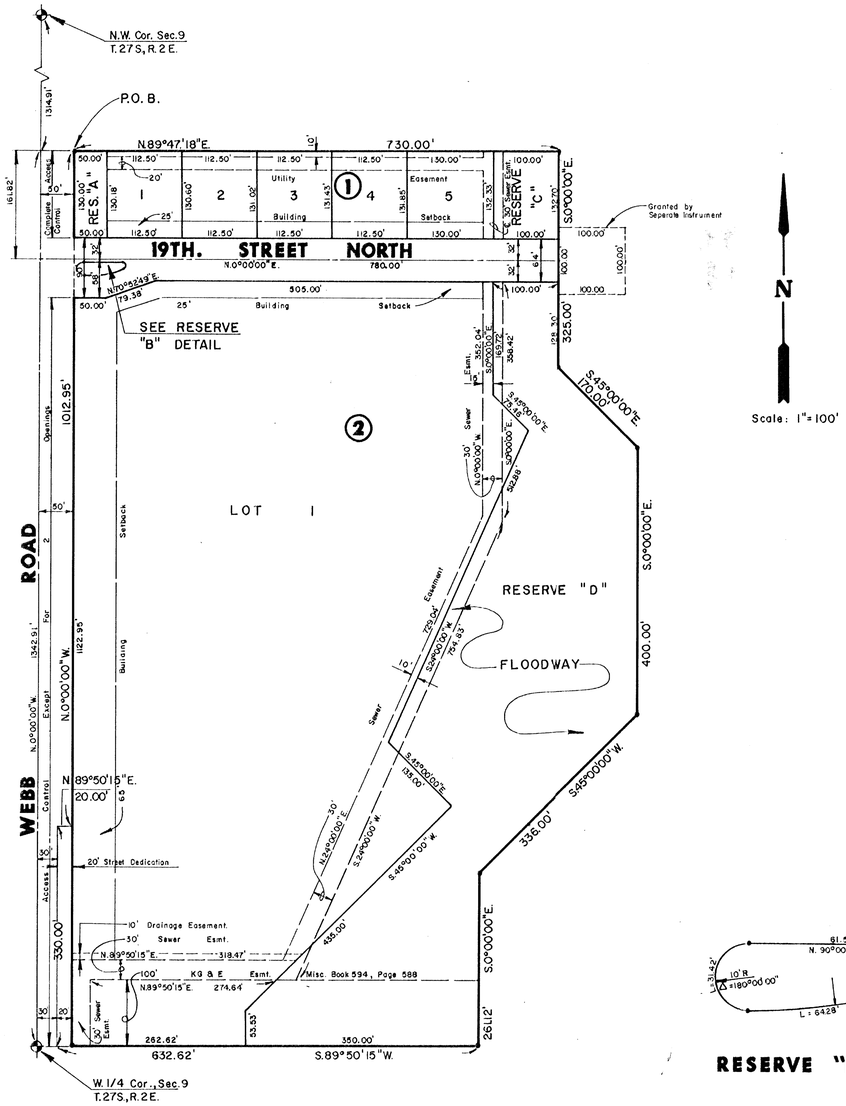

RESERVE "B" DETAIL

No.	Revision	By	Date

LATERAL 34, MAIN 24
WAR INDUSTRIES SEWER

PLAT

MICHAEL E. LINDEBAK, P.E.– CITY ENGINEER
CITY OF WICHITA PROJECT NO. 468-83246

Professional Engineering Consultants, P.A.
303 S. TOPEKA • WICHITA, KANSAS 67202
316-262-2691 • FAX 316-262-3003

Designed by	MID-KANSAS ENGINEERING CONSULTANTS, INC.	Job No. 34-01158-2	Sht. 6 of 19
Drawn by	MID-KANSAS ENGINEERING CONSULTANTS, INC.	Date March 2001	

DSN#: MDK OPER: TLS SCALE: 1=100.00
C:\2001\01158\002\ETMRPLAT 08-14-2001 01:53:26 pm

N-385,869.4493, E-2,369,490.9498
Sta. 0+00.0
Existing Precast Concrete MH.
Connect new 8" Pipe to existing 8" Stub.

CAUTION !!!
Buried Telephone (SWB)

CAUTION !!!
8" Waterline (City of Wichita)

N-385,879.3285, E-2,369,671.0577
Sta. 1+80.4
Const. MH 1
Standard MH

N-385,888.4498, E-2,370,142.4193
Sta. 6+51.8
Const. MH 2
Outside Drop MH

CAUTION !!!
Prop. 8" Waterline (by others)

N-385,887.6921, E-2,370,408.4541
Sta. 9+17.8
Const. MH 3
Standard MH

SCALE:
PLAN: LAT. & LONG. 0 40 80
PROFILE: HORIZ. SAME AS ABOVE
VERT.

HANLEY SECOND ADDITION

EASTMINSTER

VINEGATE

19TH STREET NORTH

RESERVE "A"

RESERVE "B"

RESERVE "C"

FREDERIC

Found 5/8" Rebar w/ MKEC Cap

Found 5/8" Rebar w/ MKEC Cap

Sta. 0+28.00 to Sta. 0+58.00
Construct 30 L.F. Reinforced Concrete encasement

Install 180.4 L.F. 8" Pipe

**Remove and Replace 55 L.F. Asphalt Pavement with Curb & Gutter in kind

Install 471.4 L.F. 8" Pipe

LINE NO. 4
See sheet no. 11

Remove and Reset fence as required.

Install 266.0 L.F. 8" Pipe

LINE NO. 2
See sheet no. 9

CAUTION !!!
Proposed 15" RCP Storm Sewer (by others)

NOT PARALLEL

Proposed 8" Waterline

Buried Elec. (KGE) (rec. info.)

Buried Cable TV (Cox) (rec. info.)

Buried Telephone (SWB) (rec. info.)

Exist. 8" Waterline (rec. info.)

Masonry Fence

Top of Mound

12" Osage Orange Tree Row

15" Osage Orange Tree Row

25' Utility Easement

Concrete encasement

Limits of Prop. Pvmt.

Exist. 8" Waterline

Prop. 8" Waterline (by others)

Exist. Asphalt Road

Concrete

SWS Inlet

Sewer pipe

Sewer Sprinklers

Buried Telephone (SWB) (rec. info.)

Exist. Hand Hole

Exist. 8" Waterline

10" Elm

12" Elm

15" Osage Orange Tree Row

Limits of Prop. Pvmt.

Drainage Easement

15" RCP

24" RCP

30" RCP

* PRIOR TO BEGINNING CONSTRUCTION, THE CONTRACTOR SHALL EXCAVATE THE EXISTING 8" PVC PIPE AT SANITARY SEWER STATION 0+00.00 TO VERIFY ITS HORIZONTAL AND VERTICAL LOCATION. THE PIPE LOCATION SHALL BE REPORTED TO THE ENGINEER SO THAT ANY NECESSARY PLAN MODIFICATIONS CAN BE MADE. ANY ADDITIONAL LABOR OR MATERIALS NECESSARY TO COMPLETE THE CONNECTION SHALL BE CONSIDERED SUBSIDIARY TO THE PROJECT.

**THE CONTRACTOR SHALL CONTAIN HIS OPERATIONS TO PERMIT TRAFFIC THROUGH AND ACROSS CONSTRUCTION AT EXISTING ROADWAYS AT ALL TIMES. THE CONTRACTOR SHALL ERECT WARNING SIGNS, FLASHING LIGHTS, AND BARRICADES IN COMPLIANCE WITH THE MANUAL ON UNIFORM TRAFFIC CONTROL DEVICES TO ENSURE SAFETY AS DIRECTED IN THE GENERAL CONDITIONS. THE CONTRACTOR SHALL LIMIT THE EXTENT OF TRENCH TO REMAIN OPEN OVERNIGHT AND WEEKENDS TO LESS THAN 50 FEET.

LINE NO. 1

(1) (2) DENOTES SEWER SERVICE. SEE SHEET NO. 15 FOR SEWER SERVICE SCHEDULE AND DETAILS

MICHAEL D. KEEL — 13944 — 8/28/01 — KANSAS PROFESSIONAL ENGINEER

RECORD DRAWING

PLAN — CHECKED — CHECKED — BY — DATE

PROFILE — CHECKED — CHECKED — BY — DATE

Existing MH 1
Top Elev.= 191.54

Buried Telephone

Exist. 8" Waterline
Top of Pipe= 181.45

MH 1
Top Elev.= 192.16

Sta. 1+03 to Sta. 1+62
Place 59 L.F. of Excavatable Flowable Fill from top of pipe bedding to Elev.= 193.0

Existing Ground

Concrete encasement

E Out= 181.72
E In= 182.30

180.4 L.F. 8" Pipe
@ 2.00%

E = 184.30

E = 183.91

E = 183.77

E = 180.39

E = 180.29

4/1.4 L.F. 8" Pipe
@ 0.40%

E = 187.19

E = 187.59

MH 2
Top Elev.= 192.25
Pipe E Out= 187.25

E = 192.98

Proposed Ground (By Others)

Sta. 6+81 to Sta. 7+14
Place 33 L.F. of Excavatable Flowable Fill from top of pipe bedding to Elev.= 204.5

191.31
E In = 191.91
from LINE NO. 2

187.81
E In = 187.99
from LINE NO. 4

E Out= 187.26

266.0 L.F. 8" Pipe
@ 0.40%

MH 3
Top Elev.= 202.60

Pipe 5° Left (by others)

E = 192.98

E = 192.38

E = 187.26

0+00 1+00 2+00 3+00 4+00 5+00 6+00 7+00 8+00 9+00 10+00

220 215 210 205 200 195 190 185 180

LATERAL 34, MAIN 24, OF THE WAR INDUSTRIES SEWER

LINE NO. 1

MICHAEL E. LINDEBAK, P.E. – CITY ENGINEER
CITY OF WICHITA PROJECT NO. 468-83746

Professional Engineering Consultants, P.A.
303 S. TOPEKA • WICHITA, KANSAS 67202
316-262-2691 • FAX 316-262-3003

Designed By MDK
Drawn By DAW
Job No. 34-01158-2
Date March 2001

Sheet 7 of 19

DSNR: MDK OPER: JGA SCALE: 1"=40.00
Q:\2001\01158\002\SSPP01 08-28-2001 02:07:54 pm

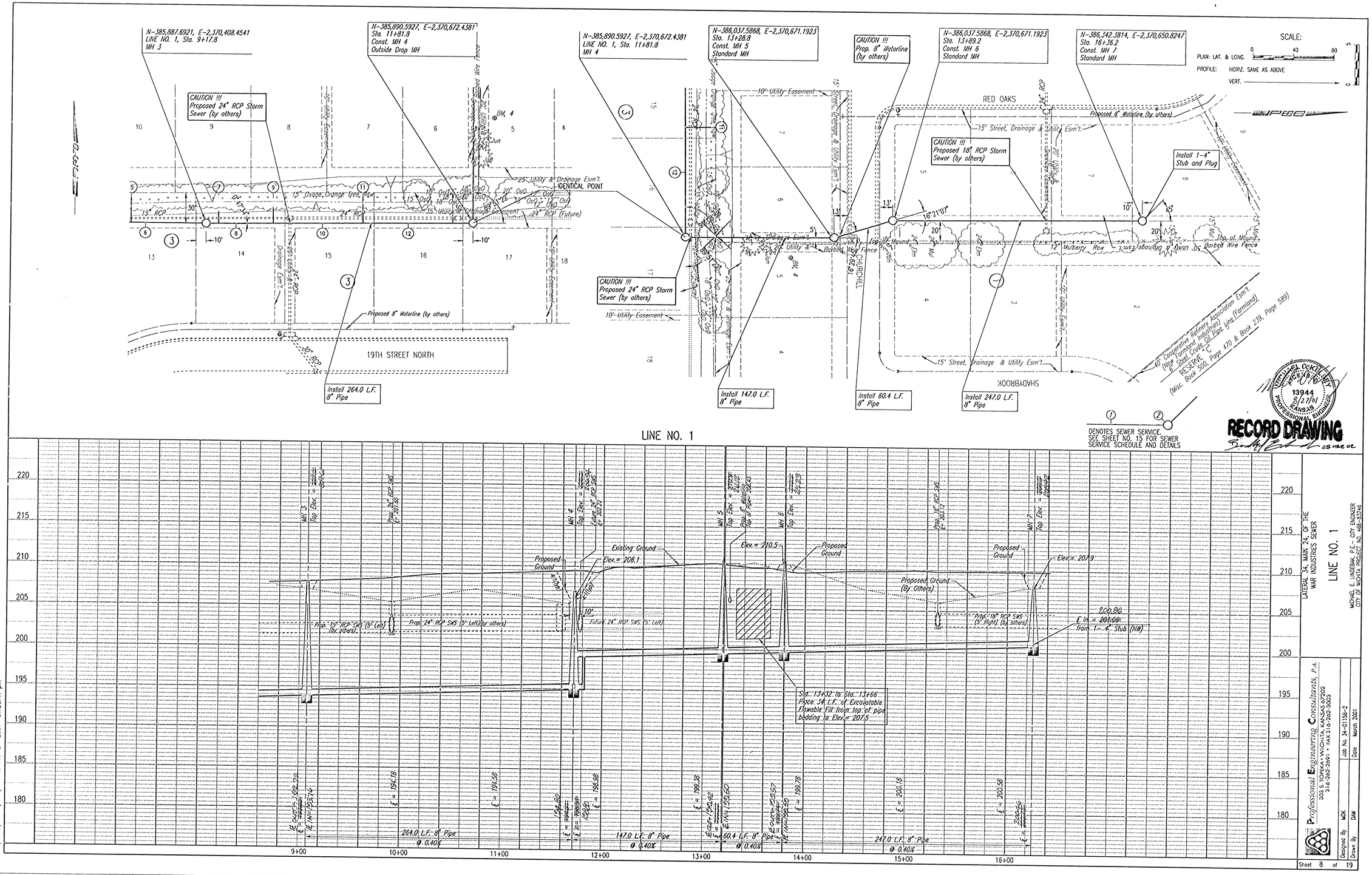

LATERAL 34, MAIN 24, OF THE WAR INDUSTRIES SEWER

LINE NO. 1

MICHAEL E. LINDEBAK, P.E. - CITY ENGINEER
CITY OF WICHITA PROJECT NO. 468-83746

Professional Engineering Consultants, P.A.
303 S. TOPEKA • WICHITA, KANSAS 67202
316-262-2691 • FAX 316-262-3003

Designed By MDK | Job No. 34-01158-2
Drawn By DAW | Date March 2001

Sheet 8 of 19

PLAN CHECKED CHECKED BY DATE

PROFILE CHECKED CHECKED BY DATE

DSNR: MDK OPER: TLS SCALE: 1=40.00
Q:\2001\01158\002\SSPP02 08-24-2001 01:20:41 pm

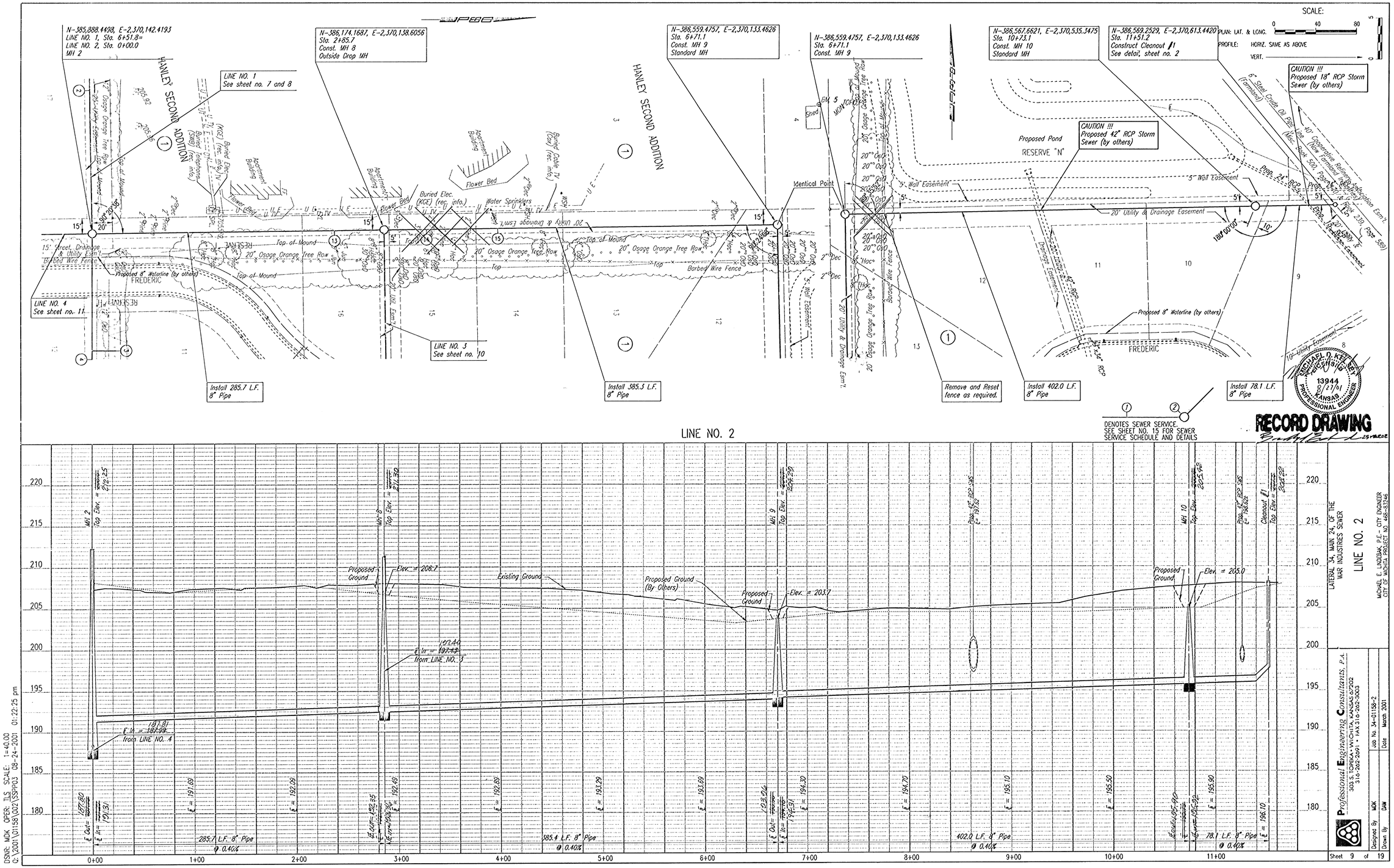

LATERAL 34, MAIN 24, OF THE WAR INDUSTRIES SEWER

LINE NO. 2

MICHAEL E. LINDEBAK, P.E. - CITY ENGINEER
CITY OF WICHITA PROJECT NO. 468-83246

Professional Engineering Consultants, P.A.
303 S. TOPEKA • WICHITA, KANSAS 67202
316-262-2691 • FAX 316-262-3003

Designed By MDK
Drawn By DAW
Job No. 34-01158-2
Date March 2001

Sheet 9 of 19

PLAN CHECKED CHECKED BY DATE

PROFILE CHECKED CHECKED BY DATE

DSNR: MDK OPER: TLS SCALE: 1=40.00
Q:\2001\01158\002\SSPP03 08-24-2001 01:22:25 pm

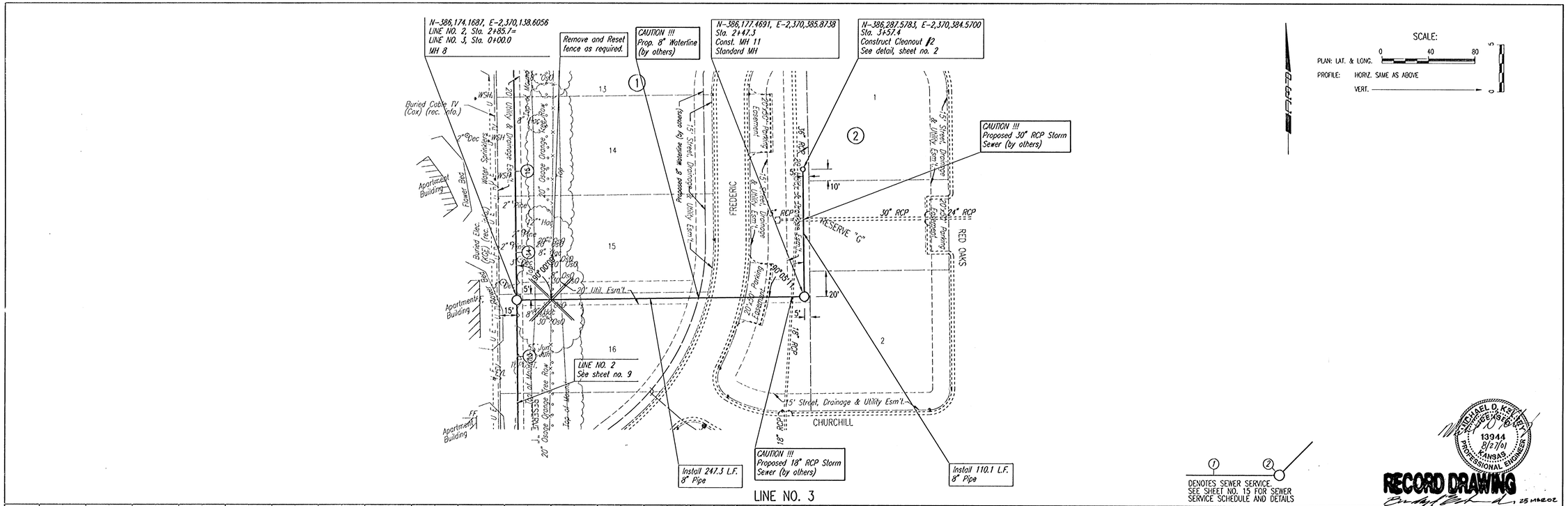

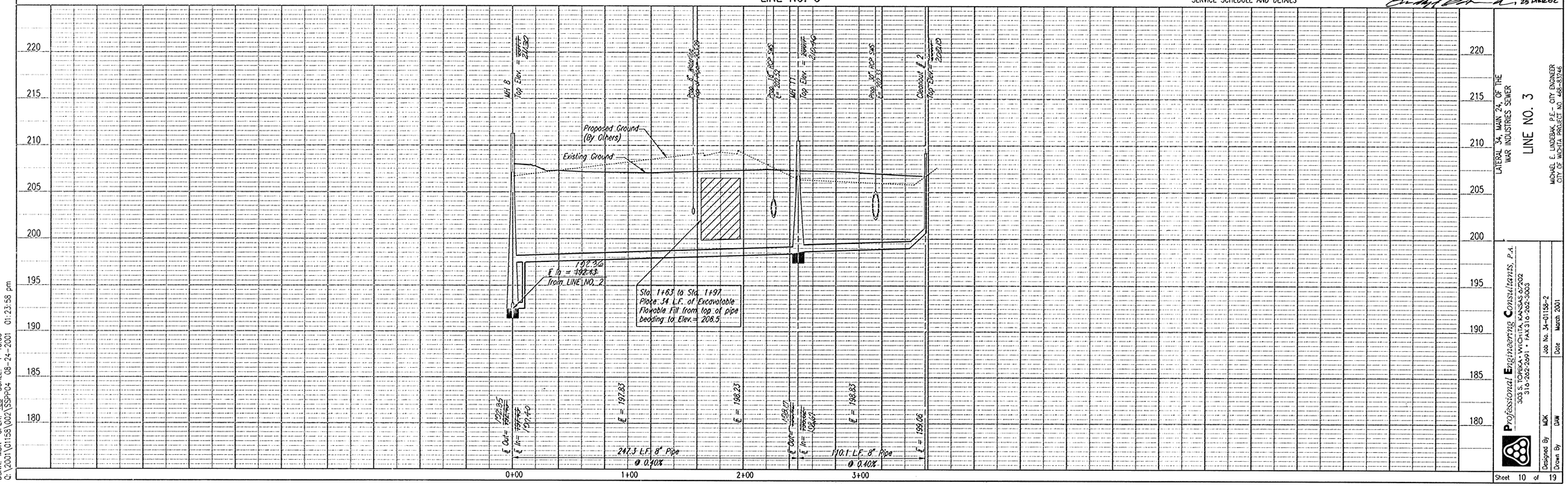

LATERAL 34, MAIN 24, OF THE WAR INDUSTRIES SEWER

LINE NO. 3

MICHAEL E. LINDEBAK, P.E. - CITY ENGINEER
CITY OF WICHITA PROJECT NO. 468-83746

Professional Engineering Consultants, P.A.
303 S. TOPEKA • WICHITA, KANSAS 67202
316-262-2691 • FAX 316-262-3003

Designed By MDK | Job No. 34-01158-2
Drawn By DAW | Date March 2001

Sheet 10 of 19

PLAN CHECKED CHECKED BY DATE

PROFILE CHECKED CHECKED BY DATE

DSNR: MDK OPER: TLS SCALE: 1=40.00
Q:\2001\01158\002\SSPP04 08-24-2001 01:23:58 pm

N-385,888.4498, E-2,370,142.4193
LINE NO. 1, Sta. 6+51.8=
LINE NO. 4, Sta. 0+00.0
MH 2

CAUTION !!!
Prop. 8" Waterline
(by others)

N-385,586.3921, E-2,370,146.4511
Sta. 3+02.1
Const. MH 12
Standard MH

N-385,587.8199, E-2,370,276.3943
Sta. 4+32.1
Const. MH 13
Standard MH

N-385,417.8302, E-2,370,278.2621
Sta. 6+02.1
Const. MH 14
Outside Drop MH

N-385,247.8404, E-2,370,280.1299
Sta. 7+72.1
Const. MH 15
Outside Drop MH

N-385,077.8507, E-2,370,281.9977
Sta. 9+42.1
Const. MH 16
Outside Drop MH

N-384,987.6940, E-2,370,282.9883
Sta. 10+32.3
Construct Cleanout #3
See detail, sheet no. 2

SCALE:
0 40 80
PLAN: LAT. & LONG.
PROFILE: HORIZ. SAME AS ABOVE
VERT.

LINE NO. 1
See sheet no. 7 and 8

LINE NO. 2
See sheet no. 9

LINE NO. 5
See sheet no. 12

LINE NO. 6
See sheet no. 12

LINE NO. 7
See sheet no. 12

LINE NO. 8
See sheet no. 12

10' Utility Easement
15' Osage Orange Tree Row
RESERVE 'H'
FREDERIC
19TH STREET NORTH
RESERVE 'I'
Proposed 8" Waterline (by others)
Top
Barbed Wire Fence
15' Street, Drainage, Utility Esm't
15' Osage Orange Tree Row
20' Osage Orange Tree Row
Top of Mound
20' Utility & Drainage Esm't
Barbed Wire Fence
15' Utility Easement
Proposed 8" Waterline (by others)
Top of Mound
Barbed Wire Fence
20' Osage Orange Tree Row
Top of Mound
20' Osage Orange Tree Row
Top of Mound
Barbed Wire Fence
20' Osage Orange Tree Row
15' Utility Esm't
Remove Fence as required do not replace
2"-Spec
1"-Spare
2"-Spare
Top of Mound
Top of Mound
89°59'57"
90°00'00"
180°00'00"
89°59'57"
180°00'00"
89°59'57"
180°00'00"
89°59'57"
90°00'00"
90°00'00"
5'
10'
15'
20'
214.3
Top of Mound

Install 302.1 L.F. 8" Pipe
Remove and Reset fence as required.
Install 130.0 L.F. 8" Pipe
Install 170.0 L.F. 8" Pipe
Install 170.0 L.F. 8" Pipe
Install 170.0 L.F. 8" Pipe
Install 90.2 L.F. 8" Pipe

DENOTES SEWER SERVICE.
SEE SHEET NO. 15 FOR SEWER
SERVICE SCHEDULE AND DETAILS

RICHARD D. KEITH
LICENSED
13944
8/21/01
KANSAS
PROFESSIONAL ENGINEER

RECORD DRAWING
15 MAR 02

LINE NO. 4

PLAN
DATE
BY
CHECKED
CHECKED

PROFILE
DATE
BY
CHECKED
CHECKED

Wet Well
Top Elev. = 212.45
Inv. Out = 192.90
Inv. In = 192.21
Pond Bottom Elev. = 201.01
Top of Pipe = 201.01
MH 12
Top Elev. = 202.97
Inv. Out = 189.39
Inv. In = 189.29
MH 13
Top Elev. = 202.54
Inv. Out = 189.25
Inv. In = 189.15
MH 14
Top Elev. = 200.85
Inv. Out = 190.40
Inv. In = 190.30
MH 15
Top Elev. = 200.20
Inv. Out = 191.55
Inv. In = 191.45
MH 16
Top Elev. = 200.51
Inv. Out = 192.16
Inv. In = 192.06
Cleanout #3
Top Elev. = 204.75
Existing Ground
Top mound = 208.2
Top mound = 208.0
Proposed Ground
Proposed Ground
10" Wall
10" Wall
E In = 192.16
E In = ~~192.79~~ (Line No. 1)
E In = ~~191.29~~ (Line No. 2)
from LINE NO. 1 and 2
(5+31)
E In = 197.32
from LINE NO. 6
E In = 197.27
from LINE NO. 7
E In = 197.50
from LINE NO. 8
E In = 180.95
E In = ~~189.32~~
from LINE NO. 5
Sta. 1+11 to Sta. 1+66
Place 55 L.F. of Excavatable
Flowable Fill from top of pipe
bedding to Elev.= 202.5
E = 188.39
E = 188.79
E = 189.79
E = 190.39
E = 191.19
E = 191.59
E = 191.99
E = 192.39
E = 192.29
302.1 L.F. 8" Pipe @ 0.40%
130.0 L.F. 8" Pipe @ 0.40%
170.0 L.F. 8" Pipe @ 0.40%
170.0 L.F. 8" Pipe @ 0.40%
170.0 L.F. 8" Pipe @ 0.40%
90.2 L.F. 8" Pipe @ 0.40%
0+00
1+00
2+00
3+00
4+00
5+00
6+00
7+00
8+00
9+00
10+00
220
215
210
205
200
195
190
185
180

DSNR: WDK OPER: TLS SCALE: 1=40.00
G:\2001\01158\002\SSPH05 06-24-2001 01:25:16 pm

LATERAL 34, MAIN 24, OF THE
WAR INDUSTRIES SEWER

LINE NO. 4

MICHAEL E. LINDEBAK, P.E. - CITY ENGINEER
CITY OF WICHITA PROJECT NO. 468-81245

Professional Engineering Consultants, P.A.
303 S. TOPEKA • WICHITA, KANSAS 67202
316-262-2691 • FAX 316-262-5063

Designed By WDK
Drawn By DAM
Job No. 34-01158-2
Date March 2001

Sheet 11 of 19

N-385,581.8199, E-2,370,276.3943
LINE NO. 4, Sta. 4+32.1 =
LINE NO. 5, Sta. 0+00.0
MH 13

N-385,590.6686, E-2,370,590.0801
Sta. 3+13.7
Const. MH 17
Standard MH

N-385,592.0969, E-2,370,720.0723
Sta. 4+43.7
Construct Cleanout #1
See detail, sheet no. 2

19TH STREET NORTH

CAUTION !!!
Prop. 36" RCP Storm
Sewer (by others)

CAUTION !!!
Prop. 8" Waterline
(by others)

299' Long 36" RCP

20' Utility Esm't

20' Utility & Drain. Esm't

10' Utility Esm't

15" RCP

Proposed Pond
(by others)

RESERVE "K"

19TH COURT NORTH

Install 1-8"
Stub and Plug

LINE NO. 4
See sheet no. 11

Install 313.7 L.F.
8" Pipe

Install 130.0 L.F.
8" Pipe

① ② DENOTES SEWER SERVICE.
SEE SHEET NO. 15 FOR SEWER
SERVICE SCHEDULE AND DETAILS

LINE NO. 5

N-385,417.8302, E-2,370,278.2621
LINE NO. 4, Sta. 6+02.1=
LINE NO. 6, Sta. 0+00.0
MH 14

N-385,418.5360, E-2,370,357.2591
Sta. 0+79.0
Construct Cleanout #5
See detail, sheet no. 2

CAUTION !!!
Prop. 8" Waterline
(by others)

RESERVE "K"

15" RCP

10' Utility Esm't

Proposed 8" Waterline (by others)

15' x 20' San.
Sewer Esm't.

LINE NO. 4
See sheet no. 11

Install 79.0 L.F.
8" Pipe

LINE NO. 6

N-385,247.8404, E-2,370,280.1299
LINE NO. 4, Sta. 7+72.1
LINE NO. 7, Sta. 0+00.0
MH 15

N-385,248.5462, E-2,370,359.1269
Sta. 0+79.0
Construct Cleanout #6
See detail, sheet no. 2

CAUTION !!!
Prop. 8" Waterline
(by others)

10' Util. Esm't

15' x 20' San.
Sewer Esm't.

LINE NO. 4
See sheet no. 11

Install 79.0 L.F.
8" Pipe

LINE NO. 7

N-385,077.8507, E-2,370,281.9977
LINE NO. 4, Sta. 9+42.1=
LINE NO. 8, Sta. 0+00.0
MH 16

N-385,078.5565, E-2,370,360.9947
Sta. 0+79.0
Construct Cleanout #7
See detail, sheet no. 2

CAUTION !!!
Prop. 8" Waterline
(by others)

SCALE:
PLAN: LAT. & LONG. 0 40 80
PROFILE: HORIZ. SAME AS ABOVE
VERT.

GM J
Top of Mound

Backed Wire Fence

15" MP

15' x 20' San.
Sewer Esm't.

10' Util. Esm't

Install 79.0 L.F.
8" Pipe

LINE NO. 8

MICHAEL D. KEEVER
NUMBER
13944
8/27/01
KANSAS
PROFESSIONAL ENGINEER

RECORD DRAWING
25 MAR 02

DATE | BY
PLAN CHECKED CHECKED
PROFILE CHECKED CHECKED

DSNR: MDK OPER: TLS SCALE: 1"=40.00
C:\2001\01158\002\SSPP06 06-24-2001 01:26:28 pm

220 / 215 / 210 / 205 / 200 / 195 / 190 / 185 / 180

MH 13 Top Elev. = 208.55 Prop. 8" Waterline Top of Pipe= 203.34
Prop. 36" RCP Elev.= 193.35
MH 17 Top Elev. = 206.65 Prop. 8" Waterline Top of Pipe= 201.54
Cleanout # 4 Top Elev.= 208.25

Existing Ground
Proposed Ground (by others)
Proposed Ground
Elev= 208.5
Elev= 202.0
4.0%
4.0%
10'
192.48
℄ In = ~~192.32~~
from 1-8" Stub (S)
Sta. 0+17.5 to Sta. 0+56.5
Place 39 L.F. of Excavatable
Flowable Fill from top of pipe
bedding to Elev.= 204.5
192.05
℄ In = ~~192.92~~
from LINE NO. 4
℄ Out= 189.65
℄ In= 190.15
℄ = 190.82
℄ = 191.52
313.7 L.F. 8" Pipe
@ 0.70%
℄ Out= 190.22
℄ In= 190.38
℄ = 192.22
℄ = 194.48
℄ = 195.52
130.0 L.F. 8" Pipe
@ 2.50%
0+00 1+00 2+00 3+00 4+00

MH 14 Top Elev. = 208.23 Prop. 8" Waterline Top of Pipe= 203.04
Cleanout # 5 Top Elev.= 208.03
Top mound= 208.2
Proposed Ground
Proposed Ground (by others)
Existing Ground
4.0%
10'
Sta. 0+17.5 to Sta. 0+56.5
Place 39 L.F. of Excavatable
Flowable Fill from top of pipe
bedding to Elev.= 204.5
190.87
℄ In = ~~190.80~~
from LINE NO. 4
℄ Out= 190.27
℄ In= 190.42
℄ = 191.32
℄ = 191.97
79.0 L.F. 8" Pipe
@ 1.00%
0+00

MH 15 Top Elev. = 208.50 Prop. 8" Waterline Top of Pipe= 203.39
Cleanout # 6 Top Elev.= 208.49
Top mound= 208.0
Proposed Ground
Proposed Ground (by others)
Existing Ground
Sta. 0+17.5 to Sta. 0+56.5
Place 39 L.F. of Excavatable
Flowable Fill from top of pipe
bedding to Elev.= 204.5
191.55
℄ In = ~~191.43~~
from LINE NO. 4
℄ Out= 190.49
℄ In= 190.64
℄ = 191.27
℄ = 191.97
79.0 L.F. 8" Pipe
@ 1.00%
0+00

MH 16 Top Elev. = 208.37 Prop. 8" Waterline Top of Pipe= 203.56
Cleanout # 7 Top Elev.= 208.32
Top mound= 208.4
Proposed Ground
Proposed Ground (by others)
Existing Ground
Sta. 0+17.5 to Sta. 0+56.5
Place 39 L.F. of Excavatable
Flowable Fill from top of pipe
bedding to Elev.= 202.0
192.19
℄ In = ~~192.15~~
from LINE NO. 4
℄ Out= 189.68
℄ In= 189.83
℄ = 190.38
℄ = 197.50
℄ = 198.15
79.0 L.F. 8" Pipe
@ 1.00%
0+00

LATERAL 34, MAIN 24, OF THE
WAR INDUSTRIES SEWER

LINE NOS. 5, 6, 7 & 8

MICHAEL E. LINDEBAK, P.E. - CITY ENGINEER
CITY OF WICHITA PROJECT NO. 468-83746

Professional Engineering Consultants, P.A.
303 S. TOPEKA • WICHITA, KANSAS 67202
316-262-2691 • FAX 316-262-0063

Designed By MDK | Job No. 34-01158-2
Drawn By DJW | Date March 2001

SEWER APPURTENANCES DETAILS

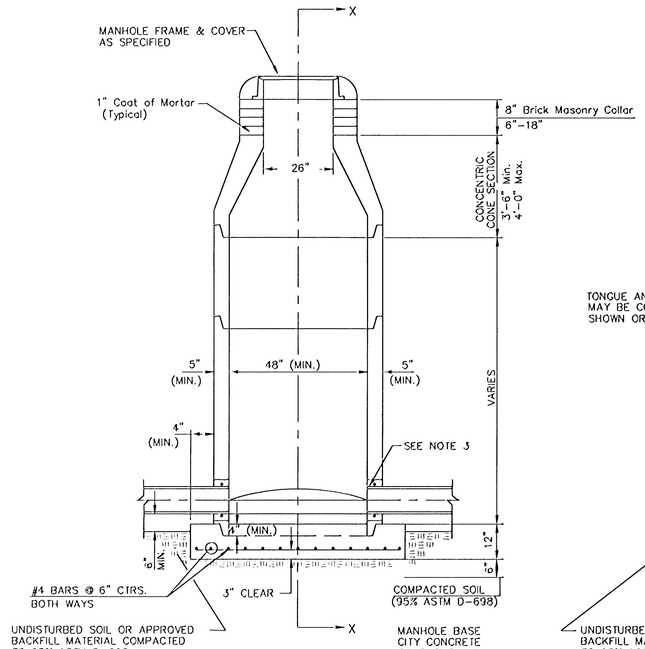

TYPE P
STANDARD MANHOLE

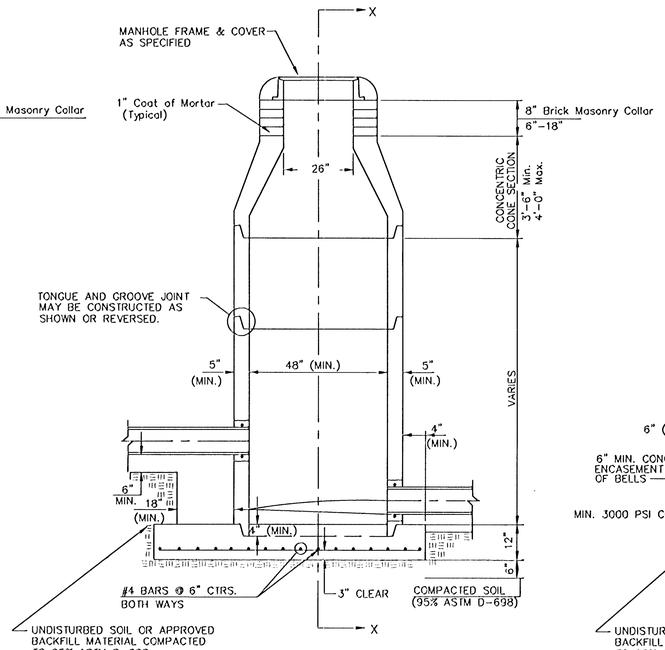

TYPE P
INSIDE DROP MANHOLE

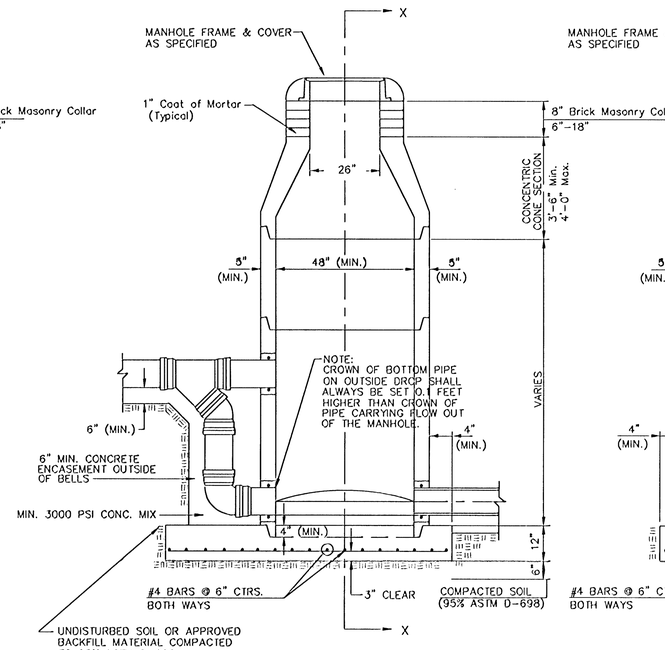

TYPE P
OUTSIDE DROP MANHOLE

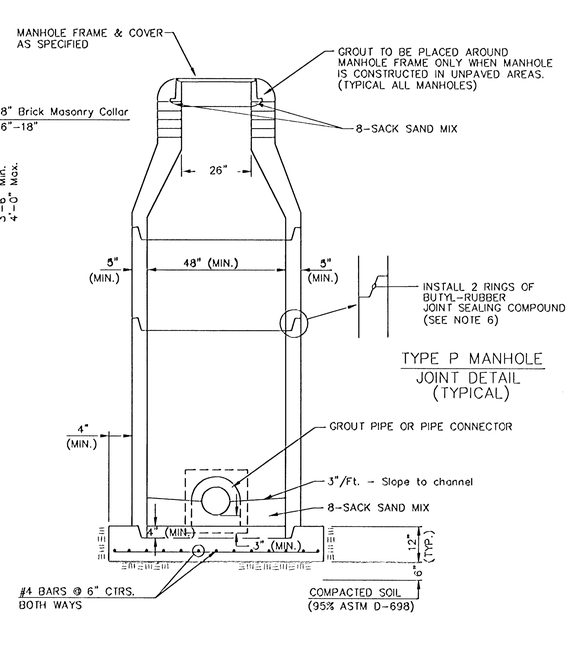

SECTION X
(TYPICAL)

GENERAL NOTES

PRECAST MANHOLE NOTES

1. ALL PRECAST CONCRETE MANHOLE SECTIONS SHALL CONFORM TO THE LATEST REVISIONS OF A.S.T.M. C478 AS MODIFIED BY THE SPECIFICATIONS.
2. NON-SHRINK GROUT SHALL BE NON-METALLIC TYPE.
3. APPROVED FLEXIBLE WATERSTOP GASKETS SHALL BE INSTALLED TO JOIN THE SEWER TO THE MANHOLE WALL WHEN A.B.S. COMPOSITE PIPE OR P.V.C. PIPE IS USED. FOR OTHER TYPES OF PIPE THE SEWER SHALL BE GROUTED IN PLACE WITH NON-SHRINK GROUT. THE SEWER PIPE SHALL BE SUPPORTED WITH CONCRETE ENCASEMENT A MINIMUM OF 3 FEET FROM THE MANHOLE WALL AND TO THE FIRST JOINT FOR V.C.P. SUCH THAT THE JOINT REMAINS FLEXIBLE.
4. ALL INSIDE SURFACES OF THE CONCRETE MANHOLE WHICH WOULD BE EXPOSED TO SEWER GAS SHALL BE COATED WITH 2 COATS INEMEC SERIES 66 HI-BUILD EPOXOLINE, DRY THICKNESS OF 8 MILS (MIN.)
5. EXTERIOR MANHOLE WALLS SHALL BE COATED WITH 1 COAT MOBILARMA 633 BITUMINOUS COATING.
6. JOINT SEALING COMPOUND SHALL BE KENT SEAL NO. 2 OR APPROVED EQUAL.
7. PRECAST MANHOLES SHALL BE SET AT LEAST 4 INCHES INTO THE MANHOLE BASE.
8. TOP OF MANHOLE FLOOR SLAB SHALL BE AT LEAST 3 INCHES BELOW THE FLOW LINE OF THE OUTLET PIPE TO INSURE SUFFICIENT MINIMUM THICKNESS OF SHAPED INVERT.
9. LIFTING HOLES SHALL BE FILLED WITH NON-SHRINK GROUT AND THE INTERIOR SURFACE COATED AS SPECIFIED.
10. MORTAR USED IN MASONRY CONSTRUCTION SHALL CONTAIN 8 SACKS OF CEMENT PER CUBIC YARD. CONCRETE USED IN MANHOLE BASES SHALL CONFORM TO THE REQUIREMENTS OF CONCRETE FOR CONCRETE PAVEMENT CONSTRUCTION AS SPECIFIED IN THE CITY STANDARD PAVING SPECIFICATIONS USING CITY CONCRETE PAVEMENT MIX WITHOUT AIR ENTRAINING ADMIXTURE. MORTAR SHALL BE PLACED AROUND THE MANHOLE RING AS SHOWN ON THE DRAWINGS WHEN MANHOLES ARE CONSTRUCTED IN UNPAVED AREAS. MANHOLES CONSTRUCTED WHERE PIPE SIZES ARE SMALLER THAN 24" SHALL HAVE AN INSIDE DIAMETER OF 4'. MANHOLES CONSTRUCTED WHERE PIPE SIZES ARE 24" OR LARGER SHALL HAVE AN INSIDE DIAMETER OF 5'. COMPLETED MANHOLE SHALL BE WITHOUT LEAKS AND WATER TIGHT.
11. REINFORCING STEEL SHALL BE INSTALLED IN THE MANHOLE BASES AND SHALL CONSIST OF NO. 4 BARS PLACED ON 6" CENTERS IN BOTH DIRECTIONS. THE MANHOLE BASE REINFORCEMENT SHALL BE PLACED AT LEAST 3" ABOVE THE BOTTOM OF THE MANHOLE BASE. ALL COSTS FOR FURNISHING AND INSTALLING REINFORCING STEEL SHALL BE INCLUDED IN THE UNIT PRICE BID FOR THE MANHOLE.
12. OPENINGS SHALL BE CUT INTO THE MANHOLE WALL WHEN OUTSIDE DROPS ARE CONSTRUCTED ON EXISTING MANHOLES. SUCH OPENINGS CUT INTO EXISTING MANHOLES SHALL BE AS SMALL AS PRACTICAL TO FACILITATE INSTALLING AND GROUTING THE NEW PIPE IN PLACE. WATERSTOP GASKETS SHALL BE USED WITH P.V.C. AND A.B.S. COMPOSITE PIPE. THE NEW PIPE SHALL BE GROUTED INTO THE OPENING USING AN APPROVED NONSHRINK GROUT FOR THE FULL MANHOLE WALL THICKNESS. THE EXTERIOR OF THE COMPLETED CONNECTION SHALL BE SEALED WITH AN APPROVED BITUMINOUS COATING SUCH THAT THE CONNECTION WILL BE WATER TIGHT. FLOOR OF MANHOLE SHALL BE MODIFIED TO FORM NEW FLOW CHANNEL FOR THE NEW CONNECTION AS INDICATED BY THE DRAWING. THIS WORK, INCLUDING MODIFICATION OF MANHOLE FLOOR, SHALL BE PAID FOR AT THE UNIT PRICE BID FOR OUTSIDE DROP STACK CONSTRUCTED ON EXISTING MANHOLE.
13. THE FLOORS OF ALL MANHOLES SHALL BE SHAPED WITH FLOW CHANNELS SUCH THAT THE MANHOLES WILL BE SELF CLEANING AND FREE OF AREAS WHERE SOLIDS COULD BE DEPOSITED AS SEWAGE FLOWS THROUGH THE MANHOLE FROM ALL INLET PIPES TO THE OUTLET PIPE. FLOW CHANNELS SHALL BE FORMED TO MATCH THE BOTTOM HALVES OF THE INFLOWING PIPES AND THE OUTFLOWING PIPE AS SHOWN BY THE DRAWINGS EXCEPT FOR INSIDE DROP MANHOLES. FLOW CHANNELS FOR INSIDE DROP MANHOLES SHALL BE CONSTRUCTED AS INDICATED BY THE DRAWING. MANHOLE FLOORS SHALL HAVE SLOPES OF 3 INCHES PER FOOT IN THE AREAS OUTSIDE OF THE FLOW CHANNELS SLOPED TOWARD THE FLOW CHANNELS. PIPES LAID THROUGH MANHOLES SHALL HAVE THE TOP HALF REMOVED TO NEAT LINES FOR THE FULL INSIDE DIAMETER OF THE MANHOLE. MANHOLE FLOORS SHALL THEN BE SHAPED AROUND THE BOTTOM HALF OF THE PIPE WHICH FORMS THE FLOW CHANNEL.
14. PIPES INSTALLED WITHIN THE EXCAVATION MADE FOR THE MANHOLE SHALL BE CRADLED WITH CONCRETE TO THE LIMITS OF THE MANHOLE EXCAVATION. WHEN CLAY PIPE IS USED, THE CRADLE SHALL EXTEND TO THE FIRST JOINT OUTSIDE THE MANHOLE. THE CRADLE SHALL BE TERMINATED AT THE CLAY PIPE JOINT IN A MANNER WHICH WILL MAINTAIN THE FLEXIBILITY OF THE JOINT. COST OF CRADLE WITHIN MANHOLE EXCAVATION OR TO CLAY PIPE JOINTS ADJACENT TO MANHOLE SHALL BE INCLUDED IN THE UNIT PRICE BID FOR THE MANHOLE.
15. MANHOLE COVER CASTINGS AND MANHOLE FRAME CASTINGS SHALL CONFORM TO THE REQUIREMENTS AS INDICATED IN THE STANDARD SPECIFICATIONS AND AS SHOWN IN THE STANDARD DETAIL DRAWING.
16. THE VERTICAL DROP IN INSIDE DROP MANHOLES SHALL NOT EXCEED 2' FOR INFLOWING PIPES SIZED 12" OR SMALLER AND 2' FOR INFLOWING PIPES LARGER THAN 12". THE CROWNS OF INFLOWING PIPES SHALL NEVER BE SET LOWER THAN THE CROWN OF THE OUTFLOWING PIPE.
17. STANDARD MANHOLES AND STANDARD INSIDE DROP MANHOLES SHALL BE BID AS STANDARD MANHOLES FOR THE TYPE AND DIAMETER INDICATED. OUTSIDE DROP MANHOLES SHALL BE BID AS STANDARD OUTSIDE DROP MANHOLES FOR THE TYPE AND DIAMETER INDICATED. ALL MANHOLE DIAMETERS WILL BE 4' UNLESS INDICATED OTHERWISE.
18. A BRICK MASONRY COLLAR SHALL BE INSTALLED BETWEEN THE CAST IRON FRAME AND THE CONCENTRIC CONE. THE COLLAR WILL HAVE 8" WALLS AND A VERTICAL HEIGHT OF 6" MINIMUM AND 18" MAXIMUM. A 1" COAT OF MORTAR WILL BE PLASTERED ON THE OUTSIDE OF THE COLLAR. THE USE OF PRE-CAST CONCRETE SPACERS FOR MANHOLE TOP ADJUSTMENT IS ALSO ALLOWED.

RECORD DRAWING

THE CITY OF WICHITA

CITY ENGINEER'S OFFICE
CITY HALL - SEVENTH FLOOR
455 NORTH MAIN STREET
WICHITA, KANSAS 67202
(316) 268-4501
(316) 268-4174 FAX

STANDARD TYPE 'P' MANHOLES

M. E. LINDEBAK P.E. - CITY ENGINEER

PROJECT NUMBER	OCA NO.
468-83246	743885
DATE: MAR 96	SHEET 13 OF 19

DSNR: WDK OPER: DLS SCALE: 1=1.00
Q:\2001\01183\002\Victorin 08-24-2001 01:27:24 pm

MANHOLE FRAME AND COVER DETAIL

ADOPTED AS STANDARD DESIGN BY
CITY OF WICHITA, KANSAS

MANHOLE COVER
Weight = 180 Lbs.

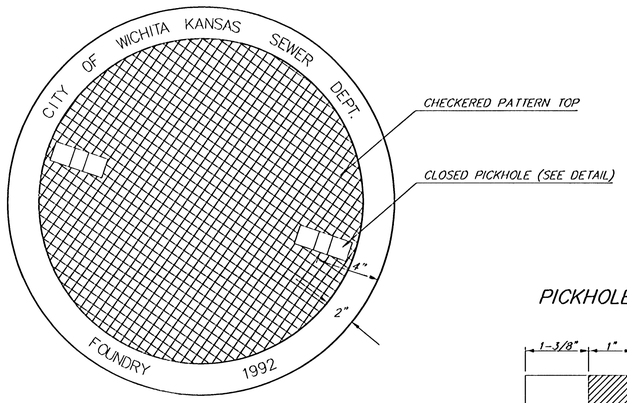

TOP VIEW

PICKHOLE DETAIL

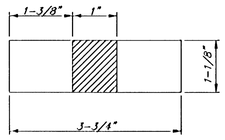

TOP VIEW

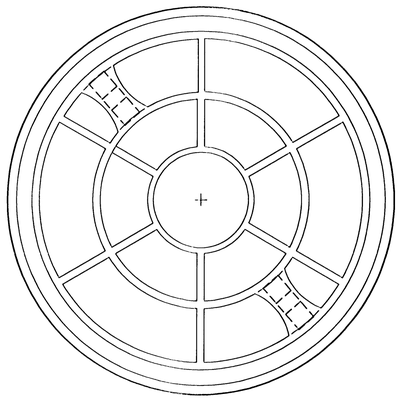

BOTTOM VIEW

SECTION VIEW

MANHOLE FRAME
Weight = 240 Lbs.

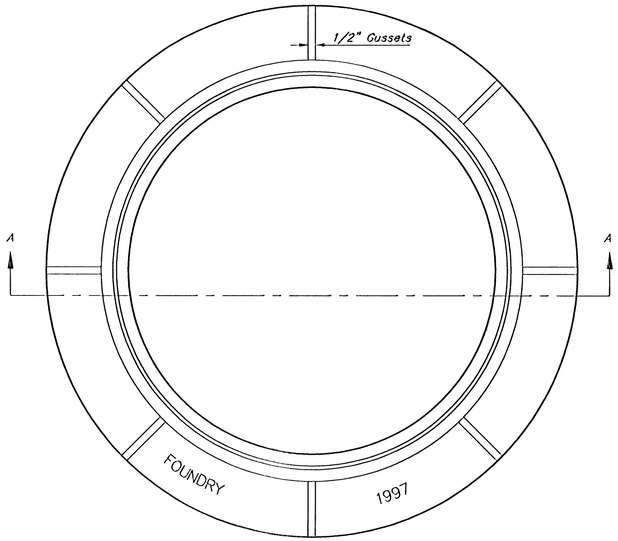

TOP VIEW

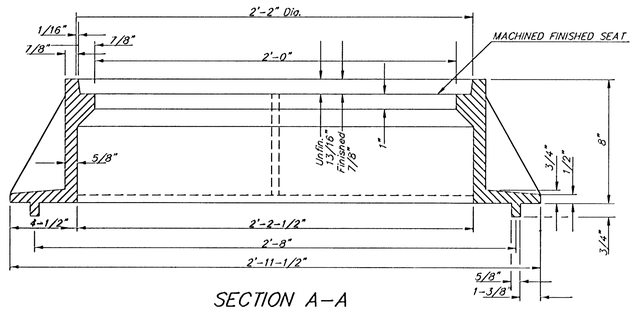

SECTION A–A
MUD RING

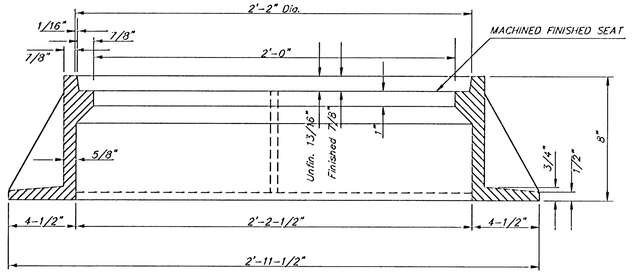

SECTION A–A

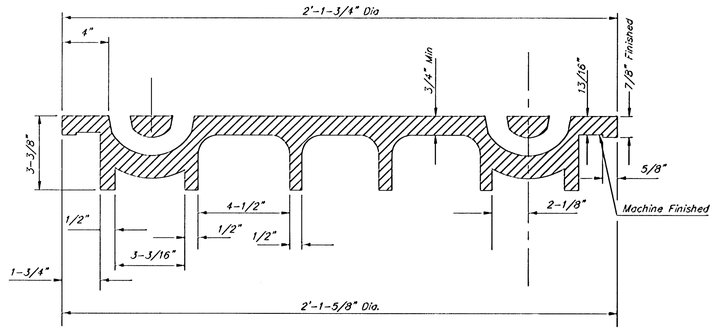

SECTION VIEW

GENERAL NOTES

1. MANHOLE CASTINGS SHALL BE MANUFACTURED USING GOOD QUALITY GRAY IRON CONFORMING TO CLASS 30 OF A.S.T.M. DESIGNATION A-48. DIMENSIONS AND WEIGHTS SHOWN ON THE DETAILED DRAWINGS SHALL BE CONSIDERED AS MINIMUM REQUIREMENTS AND ANY DEVIATIONS FROM THE DIMENSIONS SHOWN MUST BE SPECIFICALLY APPROVED. THE FINISHED CASTINGS SHALL BE OF UNIFORM QUALITY, FREE FROM BLOWHOLES, POROSITY, HARD SPOTS, SHRINKAGE DISTORTIONS OR OTHER DEFECTS.

2. MANHOLE CASTINGS SHALL WEIGH A MINIMUM OF 180 POUNDS ON THE SOLID COVER AND 240 POUNDS ON THE MANHOLE RING. THIS IS A TOTAL OF 420 POUNDS ON A RING AND COVER SET. CASTINGS WEIGHING LESS THAN THE MINIMUM SPECIFICATIONS WILL NOT BE ACCEPTED.

3. MANHOLE CASTINGS SHALL BE MANUFACTURED SUCH THAT A COVER MANUFACTURED BY ANY ONE FOUNDRY WILL FIT INTERCHANGEABLY INTO A FRAME MANUFACTURED BY ANOTHER FOUNDRY AND STILL MEET ALLOWABLE CLEARANCES AND NON-ROCKING REQUIREMENTS. THIS WILL REQUIRE MANUFACTURING OF THE MATCHING FACES ON THE COVER AND THE FRAME TO CLOSE TOLERANCES.

4. THE OUTSIDE CIRCUMFERENCE OF THE VERTICAL FACE OF THE COVER AND THE INSIDE CIRCUMFERENCE OF THE VERTICAL FACE IN THE FRAME RECESS SHALL BE MANUFACTURED TO TOLERANCES SUCH THAT THE CLEARANCE BETWEEN THE COVER AND FRAME WILL NOT EXCEED 1/8" AT ANY POINT AROUND THE CIRCUMFERENCE OF THE COVER. THE SEATING SURFACES BETWEEN THE COVER AND FRAME SHALL BE MACHINED SUCH THAT THESE SEATING SURFACES SHALL MAKE FULL CONTACT FOR THEIR FULL CIRCUMFERENCE TO PRECLUDE THE COVER FROM ROCKING IN THE FRAME.

5. THE MANHOLE FRAME AND COVER SHALL BE MARKED WITH LETTERING INDICATING THE NAME OF THE MANUFACTURER AND THE YEAR WHEN THE COVER OR FRAME WAS CAST. THE COVER SHALL BE FURTHER IDENTIFIED WITH REGARDS TO OWNERSHIP USING LETTERS AT LEAST 1 INCH IN HEIGHT. THIS IDENTIFICATION SHALL BE "CITY OF WICHITA SEWER DEPARTMENT". THE WORD DEPARTMENT MAY BE ABBREVIATED. THE TEXTURE OF THE TOP SURFACE OF THE COVER SHALL BE MANUFACTURED IN A CHECKERED PATTERN DESIGN AS INDICATED ON THE DRAWINGS. SMOOTH BLOCKOUTS SHALL BE UTILIZED TO HIGHLIGHT THE LETTERING ON THE COVER SURFACE. THE TOTAL AREA OF SMOOTH SURFACE BLOCKOUT SHALL NOT EXCEED THE AREA AS INDICATED ON THE DRAWING. POSITIONING OF SMOOTH BLOCKOUTS AND LETTERING MAY VARY FROM THAT SHOWN ON THE DETAILED DRAWING.

29 MAR 02
RECORD DRAWING

THE CITY OF WICHITA

CITY ENGINEER'S OFFICE
CITY HALL - SEVENTH FLOOR
455 NORTH MAIN STREET
WICHITA, KANSAS 67202
(316) 268-4500
(316) 268-4114 FAX

MANHOLE FRAME AND COVER

M. E. LINDEBAK P.E. - CITY ENGINEER

PROJECT NUMBER	OCA NO.
468-83246	743885
DATE: MAR 96	SHEET 14 OF 19

DSNR: MCK OPER: TLS SCALE: 1=1.00
Q:\2001\01158\002\Vering 08-24-2001 01:27:55 pm

VERTICAL RISER DETAILS

ADOPTED AS STANDARD DESIGN
BY
CITY OF WICHITA, KANSAS
OCTOBER 1992

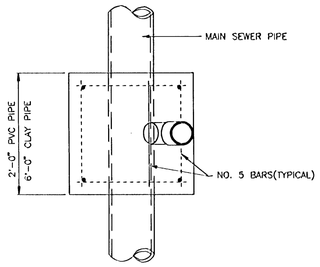

TYPICAL PLAN VIEW

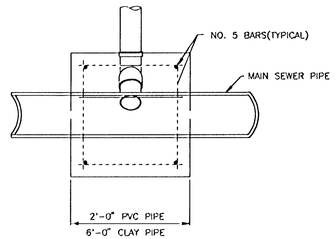

TYPICAL SECTION X-X

SEWER SERVICE TABLE
(See detail and notes, this sheet)

NO.	TYPE	LOCATION			~~STATION/ DIRECTION~~	FOR INFORMATION ONLY		RECORD INFORMATION (TO BE COMPLETED BY PROJECT INSPECTOR)		NO.	~~STATION/ DIRECTION~~
		LOT NO.	BLOCK NO.	LINE NO.		APPROXIMATE LENGTH 4" PIPE VERTICAL	APPROXIMATE LENGTH 4" PIPE HORIZONTAL	DISTANCE FROM NEAREST MANHOLE UPSTREAM	DISTANCE FROM NEAREST MANHOLE DOWNSTREAM		
1	4" Service Conn.	18	1	1	~~2+90 Rt.~~	9'	4'	362.8'	103.6'	1	2+280 Rt.
2	4" Service Conn.	17	1	1	~~5+15 Rt.~~	11'	4'	138.0'	333.4'	2	5+13.8 Rt.
3	4" Service Conn.	11	3	1	~~7+65 Lt.~~	10'	26'	137.0'	109.0'	3	7+40.8 Lt.
4	4" Service Conn.	12	3	1	~~7+75 Rt.~~	10'	4'	145.0'	121.0'	4	7+72.8 Rt.
5	4" Service Conn.	10	3	1	~~8+45 Lt.~~	9'	27'	68.0'	138.0'	5	8+49.8 Lt.
6	4" Service Conn.	13	3	1	~~8+55 Rt.~~	9'	28'	58.0'	208.0'	6	8+59.8 Rt.
7	4" Service Conn.	9	3	1	~~9+30 Lt.~~	9'	29'	253.0'	11.0'	7	9+28.8 Lt.
8	4" Service Conn.	14	3	1	~~9+40 Rt.~~	9'	4'	241.0'	23.0'	8	8+40.8 Rt.
9	4" Service Conn.	8	3	1	~~9+75 Lt.~~	8'	29'	206.0'	58.0	9	9+75.8 Lt.
10	4" Service Conn.	15	3	1	~~10+23 Rt.~~	8'	4'	155.0	109.0'	10	10+26.8 Rt.
11	4" Service Conn.	7	3	1	~~10+60 Lt.~~	8'	29'	126.0'	138.0'	11	10+65.8 Lt.
12	4" Service Conn.	16	3	1	~~11+10 Rt.~~	8'	4'	68.0	196.0'	12	11+13.8 Rt.
13	4" Service Conn.	16	1	2	~~2+35 Rt.~~	11'	4'	50.5'	239.2'	13	2+35.8 Rt.
14	4" Service Conn.	15	1	2	~~3+25 Rt.~~	10'	4'	347.4'	38.0'	14	3+23.7 Rt.
15	4" Service Conn.	14	1	2	~~3+95 Rt.~~	9'	4'	277.4'	108.0'	15	3+93.7 Rt.
16	4" Service Conn.	31	6	4	~~3+45 Lt.~~	13'	14'	86.0'	44.0'	16	3+46.1 Lt.
17	4" Service Conn.	30	6	4	~~3+60 Rt.~~	13'	4'	73.0'	37.0'	17	3+59.1 Rt.
18	4" Service Conn.	29	6	4	~~5+35 Rt.~~	15'	9'	67.5'	102.5'	18	5+34.6 Rt.
19	4" Service Conn.	28	6	4	~~6+25 Rt.~~	13'	9'	145.0'	25.0'	19	6+27.1 Rt.
20	4" Service Conn.	27	6	4	~~7+05 Rt.~~	17'	9'	68.0'	102.0'	20	7+04.1 Rt.
21	4" Service Conn.	26	6	4	~~8+00 Rt.~~	12'	9'	141.0'	23.0'	21	8+01.1 Rt.
22	4" Service Conn.	25	6	4	~~8+80 Rt.~~	10'	9'	62.0'	108.0'	22	8+80.1 Rt.
23	4" Service Conn.	24	6	4	~~9+60 Rt.~~	9'	9'	N/A	23.0'	23	9+60.1 Rt.
24	4" Service Conn.	22	7	5	~~1+05 Lt.~~	9'	4'	212.7'	101.0'	24	1+01.0 Lt.

NOTES:
1. Vertical Riser Pipe shall be extended to 2' minimum above ground water elevation and 4' maximum below proposed ground elevation.

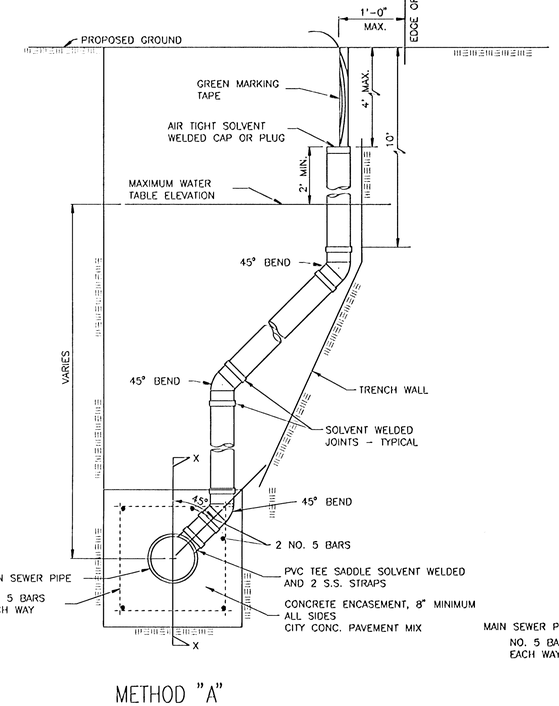

METHOD "A"

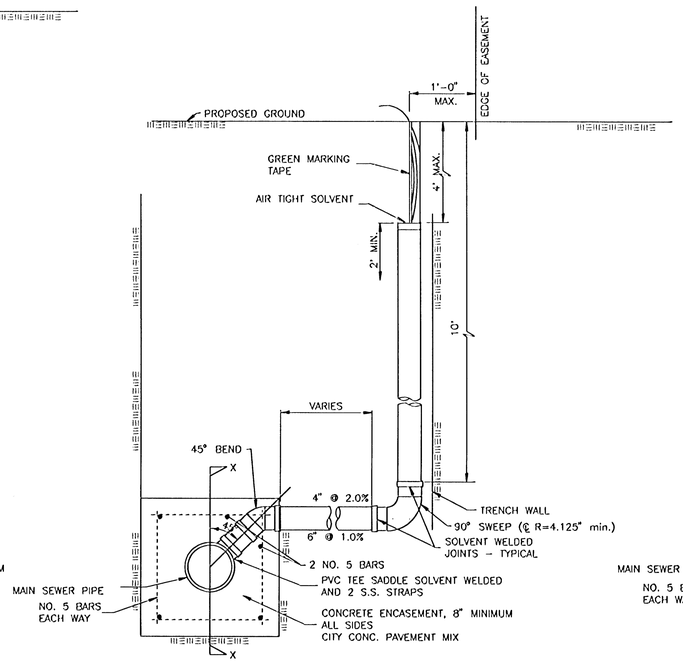

METHOD "B"

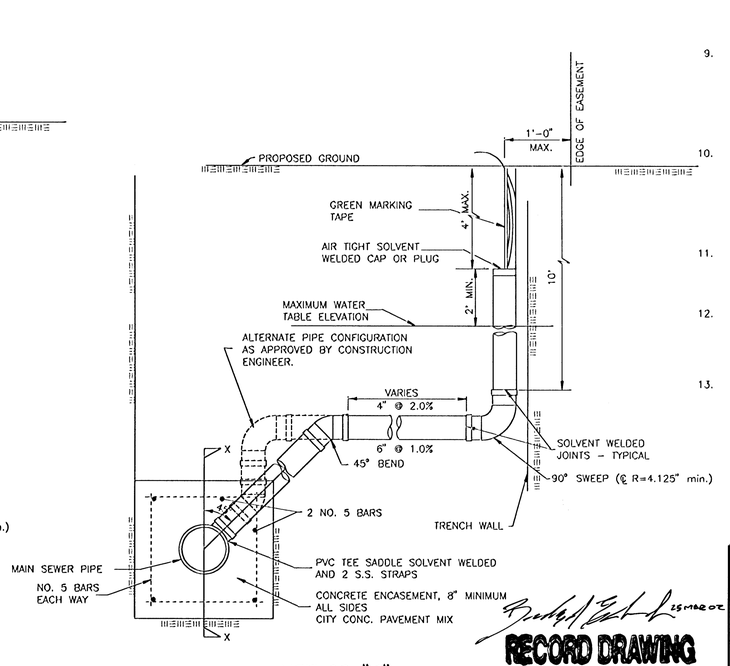

METHOD "C"

NOTE: RISER PIPE REQUIREMENTS AT MANHOLE STUBS SHALL BE SIMILAR TO THOSE SHOWN ABOVE.

RECORD DRAWING

GENERAL NOTES

1. RISERS. Risers shall be installed to serve all lots or tracts where the sanitary sewer main is below the water table. Risers shall also be installed to serve all lots and tracts where the sanitary sewer main depth is greater than 12 feet below the proposed ground elevation. Installation of risers because of field conditions shall be as approved by the Construction Engineer. The location of the risers to serve developed property shall be approved by the property owner and the Construction Engineer.

2. PIPE STUBS. Pipe stubs shall be installed in manholes where locations of manholes will provide satisfactory service connection as determined by the Construction Engineer. The vertical distance between the flowline of the manhole pipe stub and the flowline of the sanitary sewer main out of the manhole shall not exceed 2 feet. Risers shall be utilized at manhole pipe stubs as indicated in Note 1. Manhole pipe stubs shall be set such that the top of the stub is not lower than the top of the sanitary sewer main.

3. SIZING. Pipe stubs and risers shall be sized according to the plans and riser table where risers are indicated by the plans. Where risers or pipe stubs are required because of field conditions, the risers and stubs shall be six-inch diameter for commercial or industrial properties and 4" or 6" diameter for residential properties, based on lot size and sanitary sewer main depth. Sizing of risers and stubs shall be approved by the Construction Engineer prior to installation.

4. RISER OR STUB MATERIAL. Risers and stubs shall be constructed of Schedule 40 PVC Pipe, meeting the requirements of the latest revision of A.S.T.M. . All pipe joints shall be solvent welded.

5. REINFORCED CONCRETE ENCASEMENT. Riser connections to clay pipe sanitary sewers shall be reinforced concrete encased both ways from the riser centerline. The reinforced concrete encasement shall extend three feet from the riser centerline or stop at the first sanitary sewer pipe joint within three feet of the riser centerline. Riser connections to PVC Sanitary Sewer mains shall be reinforced concrete encased one foot each way from the riser centerline. The concrete encasement shall be reinforced using reinforcing steel as shown in the appropriate drawing. The concrete shall conform to the City Standard Specifications for concrete pavement.

6. BEDDING. Bedding around the sanitary sewer riser shall be compacted Pipe Bedding Type 1 or 2. The bedding shall be placed and compacted from the depth of the sanitary sewer main to the top of the sanitary sewer riser pipe. Compacted Pipe Bedding Type 1 or 2 shall be required for all risers whether constructed in vertical wall or sloped wall trenches. Bedding material and construction practices shall be approved by the Construction Engineer prior to installation.

7. SUPPORT OF RISERS. Sanitary sewer riser pipe shall be supported during trench backfill. The riser pipe shall be held in a vertical position at all times until trench backfill and compaction has been completed. Contractor's methods for supporting and backfilling the riser pipe shall be approved by the Construction Engineer.

8. PLUGGING. The ends of the riser pipes and manhole stubs shall be plugged using an airtight solvent welded cap or plug. Cap or plug fittings shall be approved by the Construction Engineer prior to installation. Caps or plugs which do not provide an airtight seal will not be accepted.

9. TOP OF THE RISER PIPE. The top elevation of the sanitary sewer riser pipe shall be built per plan elevations, unless otherwise directed by the Construction Engineer. Where riser elevations are not shown on the plans, the top of the risers shall be set at an elevation four feet below the proposed ground surface. If ground water is encountered, the top of the riser pipe shall be set at an elevation two feet (min.) above the maximum water table elevation, regardless of the riser elevation shown on the plans.

10. MARKING. Locations of the ends of the sanitary sewer riser pipe shall be marked by fastening green colored plastic tape to the end of the riser. The tape shall be supported by a length of wooden 2 x 4, extending from the top of the riser pipe to the proposed ground surface. The green tape shall be visible and extend one foot above the proposed ground surface. The green tape shall be 4 mil Polyethylene film with a minimum width of three inches, specifically manufactured for the purpose of identification of underground sewers.

11. LOCATION MEASURES. The project inspector shall record and document the location of all risers constructed as measured from the nearest manhole, indicating the direction from the manhole, the direction and distance from the main, riser size, and elevation of the top of the riser.

12. RISER LOCATION. The riser shall be located per plan if shown. If not shown on the plan, the riser shall be located at the center of the lot, within one foot of the property side of the easement for the lot being served. All riser locations shall be approved by the Construction Engineer prior to installation.

13. PAYMENT. "Sanitary sewer risers" shall be paid for at the contract unit price per each, which price shall be full compensation for all pipe, fittings, marking tape, length of wooden 2 x 4, reinforced concrete encasement, support during backfill, backfill, labor, site restoration, and any other items necessary to complete the work.

"Manhole stubs" shall be paid for at the contract unit price per each, which shall be full compensation for all labor, material, and incidentals necessary to complete the work including all pipe, fittings, reinforced concrete encasement, and all other items as required and listed for "Sanitary Sewer Risers".

REVISED NOTE 4 - APRIL 98

THE CITY OF WICHITA
CITY ENGINEER'S OFFICE
CITY HALL - SEVENTH FLOOR
455 NORTH MAIN STREET
WICHITA, KANSAS 67202
(316) 268-4581
(316) 268-4114 FAX

VERTICAL RISER DETAIL

M. E. LINDEBAK P.E. - CITY ENGINEER

PROJECT NUMBER	OCA NO.
468-83246	743885
DATE: MAR 98	SHEET 15 OF 19

DSNR: MDK OPER: DLS SCALE: 1=1.00
C:\2001\01158\002\victriser 08-24-2001 01:28:27 pm

PHASE 1 – INITIAL EARTHWORK AND UTILITIES (EXCEPT STORM SEWER)

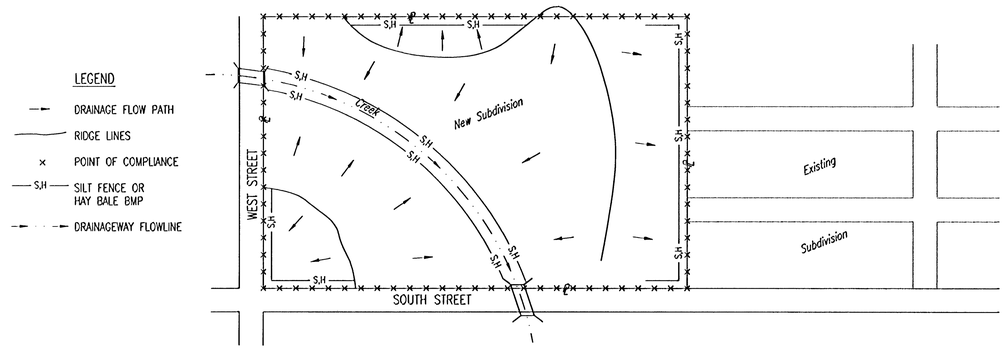

1. DURING THIS PHASE OF SUBDIVISION CONSTRUCTION, THE POINTS OF COMPLIANCE ARE THE PERIMETER BOUNDARIES AND ANY DRAINAGE WAYS OR STORM SEWERS DRAINING THROUGH OR FROM THE SITE. SHOULD LAKES BE CONSTRUCTED WITHIN THE SUBDIVISION THAT WILL DISCHARGE DURING STORMS, THEY ARE ALSO A POINT OF COMPLIANCE.
2. HAYBALES OR SILT FENCE MUST BE CONSTRUCTED ALONG THE PROPERTY LINE WHERE ON SITE WATER CAN DRAIN OFF THE PROPERTY. THESE BMP'S WILL ALSO BE INSTALLED ALONG ANY DRAINAGE DITCH OR LAKE THAT CAN DISCHARGE.
3. SHOULD SILT OR SEDIMENT ENTER THE DITCHES OR GUTTERLINES ON THE ADJACENT BOUNDARY STREETS, APPROPRIATE BMP'S WILL BE PLACED WITHIN THE SUBDIVISION TO PREVENT THIS.
4. ANY MUD TRACKED ONTO ADJACENT STREETS WILL BE REMOVED AT THE END OF EACH WORK DAY.
5. CONTRACTORS WORKING WITHIN THE SITE WILL NOT BE REQUIRED TO USE INDIVIDUAL BMP'S AS LONG AS THOSE SPECIFIED ABOVE ARE IN PLACE AND EFFECTIVE. CONTRACTORS WORKING ON THE BOUNDARY LINE STREETS OR ON ADJACENT PROPERTIES TO EXTEND UTILITIES ARE EXPECTED TO USE BMP'S AT THEIR WORK LOCATIONS, AS NEEDED.
6. UTILIZE STABILIZED CONSTRUCTION ENTRANCE AT ENTRANCE AND EXIT ONTO ANY EXISTING PUBLIC STREETS.
7. THE SUBDIVISION DEVELOPER (OWNER) SHALL INSTALL AND MAINTAIN THE ON-SITE BMP'S.

PHASE 3 – STREET CONSTRUCTION

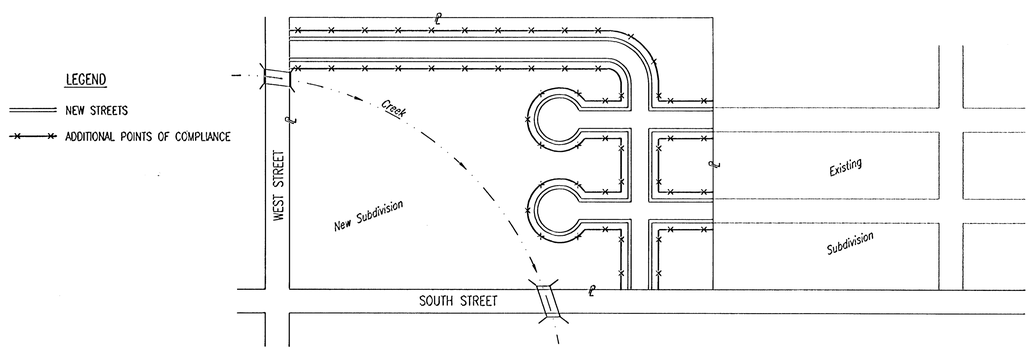

1. DURING THIS PHASE OF SUBDIVISION CONSTRUCTION, NEW STREETS ARE INSTALLED. ALL BMP'S INSTALLED DURING PHASE 1 AND 2 MUST STILL BE MAINTAINED. THE POINT OF COMPLIANCE NOW SHIFTS TO THE BACK OF CURB ALONG EACH STREET.
2. CURB OPENING INLET PROTECTION:
   A. SUMP AREAS – INLET PROTECTION SHALL BE PROVIDED WHEN STREET SUBGRADE WORK IS COMPLETED.
   B. NON-SUMP LOCATIONS – PROVIDE INLET PROTECTION AS SOON AS BASE COURSE ASPHALT IS INSTALLED, BEFORE THE SURFACE COURSE LIFT.
3. BMP'S WILL BE REQUIRED BACK OF CURB WHEREVER WATER CAN FLOW OVER THE CURB AND THE CURB HAS BEEN BACKFILLED TO WITHIN 3" OR LESS OF THE TOP OF CURB (SEE CURB BACKFILL DETAIL). FOR CURBS NOT YET ENTIRELY BACKFILLED (3" OR MORE BELOW TOP OF CURB), BMP'S WILL BE REQUIRED AT POINTS WHERE WATER BREAKS OVER CURB WHICH COULD RESULT IN THE PLACEMENT OF SEDIMENT IN THE GUTTER.
4. SEE DETAIL THIS SHEET ON BACK OF CURB PROTECTION.
5. THE BACK OF CURB PROTECTION SPECIFIED ON THIS PLAN MAY HAVE TO BE SUPPLEMENTED WITH HAYBALE OR SILT FENCE BMP'S AT LOCATIONS WHERE CONCENTRATED FLOW RESULTS IN SEDIMENT BEING CARRIED OVER THE EXCELSIOR MATS.
6. THE STREET CONTRACTOR WILL BE RESPONSIBLE FOR INSTALLING BACK OF CURB BMP'S.
7. THE INDIVIDUAL LOT OWNERS WILL BE RESPONSIBLE FOR MAINTAINING THE BACK OF CURB BMP'S IN FRONT OF THEIR LOTS UNTIL SUCH TIME AS ADJACENT DISTURBED EARTH IS STABILIZED WITH GRASS OR SOD.

PHASE 2 – INSTALLATION OF STORM SEWER

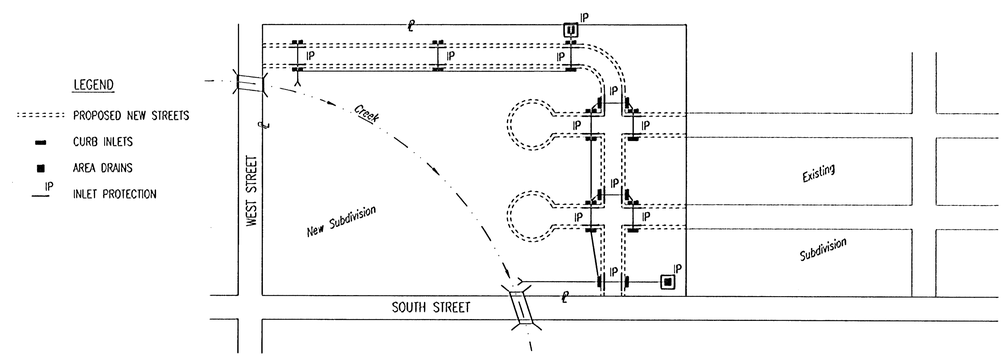

1. DURING THIS PHASE OF SUBDIVISION DEVELOPMENT, ALL BMP'S REQUIRED IN PHASE 1 SHALL REMAIN IN PLACE AND BE MAINTAINED.
2. AS NEW STORM SEWERS, WITH INLETS, ARE INSTALLED, THE STORM SEWERS MUST NOW BE PROTECTED SO ALL NEW INLETS BECOME POINTS OF COMPLIANCE.
3. AREA DRAINS – AS SOON AS WATER CAN FLOW INTO THESE DRAINS, HAYBALE OR SILT FENCE PROTECTION WILL BE INSTALLED AROUND THEM.
4. CURB OPENING INLETS – AS SOON AS WATER CAN FLOW INTO THESE DRAINS, INLET PROTECTION BMP'S MUST BE INSTALLED. SEE PHASE 3 – STREET CONSTRUCTION.
5. THE STORM SEWER CONTRACTOR WILL BE RESPONSIBLE FOR INSTALLING THESE BMP'S. IF WATER CANNOT FLOW INTO CURB INLETS UNTIL STREET CONSTRUCTION IS COMPLETE, THEN STREET CONTRACTOR WILL INSTALL INLET PROTECTION.
6. THE SUBDIVISION DEVELOPER WILL MAINTAIN THESE BMP'S ONCE INSTALLED.
7. ONCE ALL DISTURBED GROUND DRAINING TO AN INLET HAS BEEN RESTABILIZED WITH GRASS OR SOD, THE SUBDIVISION DEVELOPER WILL BE RESPONSIBLE FOR PERMANENTLY REMOVING THE INLET PROTECTION.

BACK OF CURB PROTECTION DETAIL

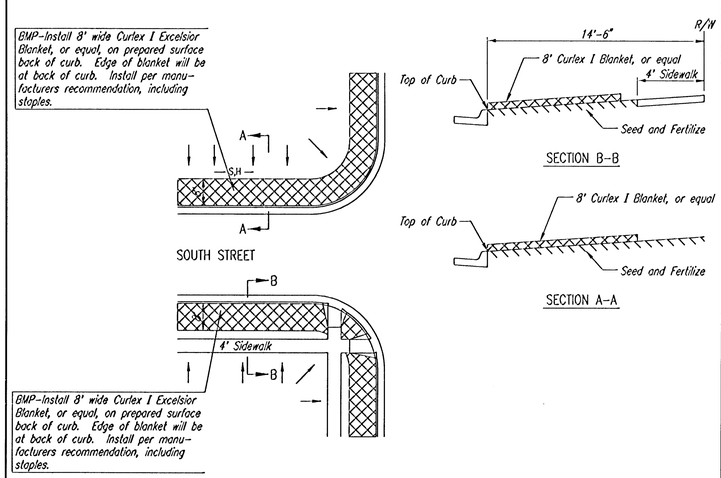

CURB BACKFILL DETAIL

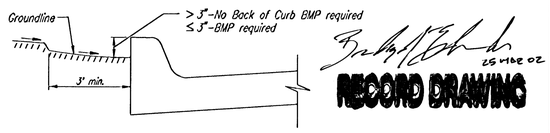

25 MAR 02
RECORD DRAWING

GENERAL NOTES:

1. THE INTENT OF ALL SOIL EROSION BEST MANAGEMENT PRACTICES (B.M.P.'S) IS TO PREVENT ERODED SOIL FROM ENTERING DITCHES, STORM SEWERS, OR ANY OTHER DRAINAGE FEATURE.
2. THIS SHEET IS INTENDED TO PROVIDE GUIDELINES AS TO WHAT TYPE OF BMP'S WILL BE INSTALLED DURING THE CONSTRUCTION PROCESS. CONTRACTORS ARE EXPECTED TO BID PROJECTS ACCORDINGLY.
3. BMP'S SHALL BE MAINTAINED DURING THE CONSTRUCTION PROCESS TO REMAIN EFFECTIVE. MAINTENANCE SHALL BE AS INDICATED ON THE BMP DETAIL SHEETS.
4. PERSONS DESTROYING BMP'S SHALL BE RESPONSIBLE FOR IMMEDIATELY REPAIRING THEM OR INSTALLING SUITABLE REPLACEMENT BMP'S.
5. THE DEVELOPMENT OF ANY SUBDIVISION THAT DISTURBS 5 ACRES OR MORE WILL REQUIRE A FEDERAL/STATE NPDES STORMWATER PERMIT. THE PREPARATION OF A STORMWATER POLLUTION PREVENTION PLAN IS REQUIRED. EROSION CONTROL BMP'S ARE REQUIRED. THE DETAILS SHOWN ON THIS SHEET ARE THE MINIMUM STANDARDS TO BE SHOWN ON POLLUTION PREVENTION PLAN.
6. FOR SUBDIVISIONS SMALLER THAN 5 ACRES, SOIL EROSION BMP'S ARE REQUIRED. ALSO, DEVELOPERS AND CONTRACTORS ARE ENCOURAGED TO DEVELOP POLLUTION PREVENTION PLANS FOR EACH PROJECT PRIOR TO CONSTRUCTION.
7. FAILURE TO USE AND MAINTAIN BMP'S IS A VIOLATION OF SECTION 16.32 OF THE CITY CODE AND WILL SUBJECT THE SUBDIVISION DEVELOPER AND CONTRACTORS TO THE PENALTIES PROVIDED THEREIN.
8. THE APPLICATION OF BMP'S SHOWN ON THIS SHEET IS FOR SITUATIONS NORMALLY ENCOUNTERED. FROM TIME TO TIME, SITUATIONS WILL ARISE THAT MAY REQUIRE A DIFFERENT BMP OTHER THAN THAT SHOWN. BMP'S, OTHER THAN THOSE SHOWN, MAY BE UTILIZED SO LONG AS THEY ARE EFFECTIVE AND MAINTAINED.
9. A STABILIZED EARTH SURFACE IS DEFINED AS ONE THAT IS HARD SURFACED WITH CONCRETE, ASPHALT, OR THE LIKE, OR ONE ON WHICH 70% OF THE GRASS HAS GERMINATED ON THE ENTIRE SURFACE.

CITY OF WICHITA

SOIL EROSION BMPS SUBDIVISION DEVELOPMENT PROCESS

CHRISTOPHER M. CARRIER, P.E.
STORM WATER ENGINEER

PROJECT NUMBER	OCA NO.
468-83246	743885
DATE: MAY 2001	SHEET 16 OF 19

DSNR: MDK OPER: TLS SCALE: 1=1.00
Q:\2001\01156\002\SEDMP_SUBDIVISION-R14 08-24-2001 01:29:12 pm

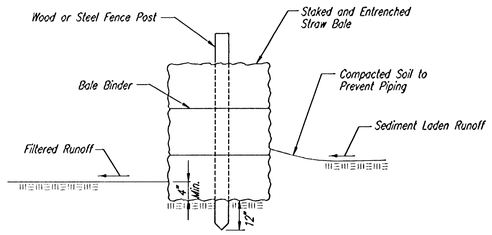

STRAW BALE BARRIERS

Material Specification:

Bale slope barriers may be constructed of wheat straw, oat straw, prairie hay, or bromegrass hay that is free of weeds declared noxious by the Kansas State Board of Agriculture.
The stakes used to anchor the bales should be a hardwood material with the following minimum dimensions: 2" square (nominal) by 4' long.

Placement:

A slope barrier should be used at the toe of a slope when a ditch does not exist. The slope barrier should be placed on nearly level ground 5' to 10' away from the toe of a slope. The barrier is placed away from the toe of the slope to provide adequate storage for settling out sediment.
When practicable, bale slope barriers should be placed along contours to avoid a concentration of flow.
Bale slope barriers can also be placed along right-of-way fence lines to keep sediment from crossing onto adjacent property. When placed in this manner, the slope barrier will not likely follow contours.

Proper installation method:

Excavate a trench the length of the planned slope barrier that is 4" deep and a bale's width wide. Make sure that the trench is excavated along a single contour. When practicable, slope barriers should be placed along contours to avoid a concentration of flow. Place the soil on the upslope side of the trench for later use.
Place the bales in the trench, making sure that they are butted tightly. Two stakes should be driven through each bale along the centerline of the ditch check, approximately 6" to 8" in from the bale ends. Stakes should be driven at least 12" into the ground.
Once all the bales have been installed and anchored, place the excavated soil against the upslope side of the check and compact it. The compacted soil should be no more than 3" to 4" deep.

List of common placement/installation mistakes to avoid:

When practical, do not place bale slope barriers across contours. Slope barriers should be placed along contours to avoid a concentration of flow. Concentrated flow over a slope barrier creates a scour hole on the downslope side of the barrier. The scour hole eventually undermines the bales and the barrier fails.
Do not place bale slope barriers in areas with shallow soils underlain by rock. If the barrier is not anchored sufficiently, it will wash out.
Bale slope barriers must be dug into the ground. Bales at ground level do not work because they allow water to flow under the barrier.

Inspection and Maintenance:

Bale slope barriers should be inspected every 7 days and within 24 hours of a rainfall of 1/2" or more. The following is a list of questions that should be addressed during each inspection:

Are there any points along the slope barrier where water is concentrating?
Does water flow under the slope barrier?
Does water flow through spaces between abutting bales?
Are any bales dislodged?
Are bales decomposing due to age and/or water damage?
Does sediment need to be removed from behind the slope barrier?

NOTE: Point A must be higher than Point B so that water flows over the bales and not around them.

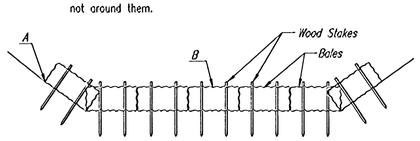

STRAW BALE DITCH CHECKS

Material Specification:

Bale ditch checks may be constructed of wheat straw, oat straw, prairie hay, or bromegrass hay that is free of weeds declared noxious by the Kansas State Board of Agriculture.
The stakes used to anchor the bales should be a hardwood material with the following minimum dimensions: 2" square (nominal) by 4' long.
Optional: The downstream scour apron should be constructed of a double-netted straw erosion-control blanket at least 6' wide.
Optional: The metal landscape staples used to anchor the erosion-control blanket should be at least 8" long.

Placement:

Bale ditch checks should be placed perpendicular to the flowline of the ditch.
The ditch check should extend far enough so that the ground level at the ends of the check is higher than the top of the lowest center bale. This prevents water from flowing around the check.
Checks should not be placed in ditches where high flows are expected. Rock checks should be used instead.
Bales should be placed in ditches with slopes of 6% or less. For slopes steeper than 6%, rock checks should be used.
The following table provides check spacing for a given ditch grade:

Ditch grade (%)	Check Spacing (feet)
0.5	200
1.0	200
2.0	100
3.0	65
4.0	50
5.0	40
6.0	30

Proper installation method:

Excavate a trench perpendicular to the ditch flowline that is 4" deep and a bale's width wide. Extend the trench in a straight line along the entire length of the proposed ditch check. Place the soil on the upstream side of the trench-it will be used later.
Optional: On the downstream side of the trench, roll out a length of erosion-control blanket (scour apron) equal to the length of the trench. Place the upstream edge of the erosion-control blanket along the bottom upstream edge of the trench. The erosion control blanket should be anchored in the trench with one row of 8" landscape staples placed on 18" centers. The remainder of the erosion-control blanket (the portion that is not lying in the trench) will serve as the downstream scour apron. This section of the blanket should be anchored to the ground with 8" landscape staples placed around the perimeter of the blanket on 18" centers. The remainder of the blanket should be anchored using two evenly spaced rows of 8" landscape staples on 18" centers placed perpendicular to the flowline of the ditch.
Place the bales in the trench, making sure that they are butted tightly. Two stakes should be driven through each bale along the centerline of the ditch check, approximately 6" to 8" in from the bale ends. Stakes should be driven at least 12" into the ground.
Once all the bales have been installed and anchored, place the excavated soil against the upstream side of the check and compact it. The compacted soil should be no more than 3" to 4" deep and extend upstream no more than 24".

List of common placement/installation mistakes to avoid:

Do not place a bale ditch check directly in front of a culvert outlet. It will not stand up to the concentrated flow.
Do not place bale ditch checks in ditches that will likely experience high flows. They will not stand up to concentrated flow.
Follow prescribed ditch-check spacing guidelines. If spacing guidelines are exceeded, erosion will occur between the ditch checks.
Do not allow water to flow around the ditch check. Make sure that the ditch check is long enough so that the ground level at the ends of the check is higher than the top of the lowest center bale.
Do not place bale ditch checks in channels with shallow soils underlain by rock. If the check is not anchored sufficiently, it will wash out.
Bale ditch checks must be dug into the ground. Bales at ground level do not work because they allow water to flow under the check.

Inspection and Maintenance:

Bale ditch checks should be inspected every 7 days and within 24 hours of a rainfall of 1/2" or more. The following is a list of questions that should be addressed during each inspection:

Does water flow around the ditch check?
Does water flow under the ditch check?
Does water flow through spaces between abutting bales?
Are any bales and/or scour aprons (optional) dislodged?
Are bales decomposing due to age and/or water damage?
Does sediment need to be removed from behind the ditch check?

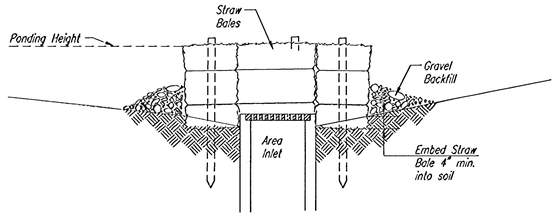

SECTION A-A

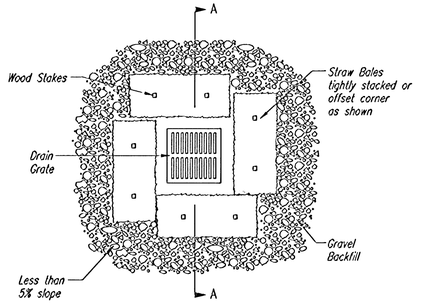

STRAW BALE BARRIERS FOR AREA INLETS
(INLET PROTECTION)

Material Specification:

Bale area inlet barriers should be constructed of wheat straw, oat straw, prairie hay, or bromegrass hay that is free of weeds declared noxious by the Kansas State Board of Agriculture.
The stakes used to anchor the bales should be a hardwood material with the following minimum dimensions: 2" square (nominal) by 4' long.

Placement:

Bale area inlet barriers should be placed directly around the perimeter of a drop inlet.
When a bale area inlet barrier is located near an inlet that has steep approach slopes, the storage capacity behind the barrier is drastically reduced. Timely removal of sediment must occur for a barrier to operate properly in this location.

Proper Installation Method:

Excavate a trench around the perimeter of the area inlet that is at least 4" deep by a bale's width wide.
Place the bales in the trench, making sure that they are butted tightly. Some bales may need to be shortened to fit into the trench around the area inlet. Two stakes should be driven through each bale, approximately 6" to 8" in from the bale ends.
Stakes should be driven at least 12" into the ground.
Once all the bales have been installed and anchored, place the excavated soil against the receiving side of the barrier and compact it. The compacted soil should be no more than 3" to 4" deep.
Note: When a bale area inlet barrier is placed in a shallow median ditch, make sure that the top of the barrier is not higher than the paved road. In this configuration, water may spread onto the roadway causing a hazardous condition.

List of common placement installation mistakes to avoid:

Bales should be placed directly against the perimeter of the area inlet. This allows overtopping water to flow directly into the inlet instead of onto nearby soil causing scour.
Bale area inlet barriers must be dug into the ground. Bales at ground level do not work because they allow water to flow under the barrier.

Inspection and Maintenance:

Bale area inlet barriers should be inspected every 7 days and within 24 hours of a rainfall 1/2" or more. The following is a list of questions that should be addressed during each inspection:

Does water flow under the area inlet barrier?
Does water flow through spaces between abutting bales?
Are any bales dislodged?
Are bales decomposing due to age and/or water damage?
Does sediment need to be removed from behind the area inlet barrier?

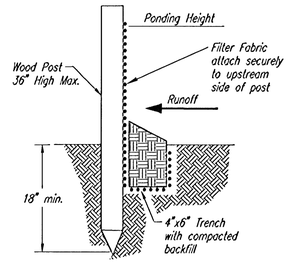

SILT FENCE BARRIERS

SILT FENCE BARRIERS

Material Specification:

Silt fence fabric should conform to the AASHTO M288 96 silt fence specification.
The posts used to support the silt fence fabric should be a hardwood material with the following minimum dimensions: 2" square (nominal) by 4' long.
Silt fence fabric should be attached to the wooden posts with staples, wire, zip ties, or nails.

Placement:

A slope barrier should be used at the toe of a slope when a ditch does not exist. The slope barrier should be placed on nearly level ground 5' to 10' away from the toe of a slope. The barrier is placed away from the toe of the slope to provide adequate storage for settling out sediment.
When practicable, silt fence slope barriers should be placed along contours to avoid a concentration of flow.
Silt fence slope barriers can also be placed along right-of-way fence lines to keep sediment from crossing onto adjacent property. When placed in this manner, the slope barrier will not likely follow contours.

Proper installation method:

Excavate a trench the length of the planned slope barrier that is 6" deep by 4" wide.
Make sure that the trench is excavated along a single contour. When practicable, slope barriers should be placed along contours to avoid a concentration of flow. Place the soil on the upslope side of the trench for later use.
Roll out a continuous length of silt fence fabric on the downslope side of the trench.
Place the edge of the fabric in the trench starting at the top upslope edge. Line all three sides of the trench with the fabric. Backfill over the fabric in the trench with the excavated soil and compact. After filling the trench, approximately 24" to 36" of silt-fence fabric should remain exposed.
Lay the exposed silt fence upslope of the trench to clear an area for driving in the posts.
Just downslope of the trench, drive posts into the ground to a depth of at least 18".
Place posts no more than 4' apart.
Attach the silt fence to the anchored post with staples, wire, zip ties, or nails.

List of common placement/installation mistakes to avoid:

When practicable, do not place silt fence slope barriers across contours. Slope barriers should be placed along contours to avoid a concentration of flow. When the flow concentrates, it overtops the barrier and the silt fence slope barrier quickly deteriorates.
Do not place silt-fence posts on the upslope side of the silt fence fabric. In this configuration, the force of the water is not restricted by the posts, but only by the staples (wire, zip ties, nails, etc.). The silt fence will rip and fail.
Do not place silt fence slope barriers in areas with shallow soils underlain by rock. If the barrier is not sufficiently anchored, it will wash out.
Silt fence slope barriers must be dug into the ground-silt fence at ground level does not work because water will flow underneath.

Inspection and Maintenance:

Silt fence slope barriers should be inspected every 7 days and within 24 hours of a rainfall of 1/2" or more. The following is a list of questions that should be addressed during each inspection:

Are there any points along the slope barrier where water is concentrating?
Does water flow under the slope barrier?
Do the silt fences sag excessively?
Has the silt fence torn or become detached from the posts?
Does sediment need to be removed from behind the slope barrier?

RECORD DRAWING
25 MAR 02

CITY OF WICHITA

SOIL EROSION BMP DETAILS

CHRISTOPHER M. CARRIER, P.E.
STORM WATER ENGINEER

PROJECT NUMBER	OCA NO.
468-83246	743885
DATE: MAY 2001	SHEET 17 OF 19

DSNR: MDK OPER: TLS SCALE: 1=1.00
C:\2001\01158\002\SEBMP_PEC_DTLS1-R14 08-24-2001 01:29:51 pm

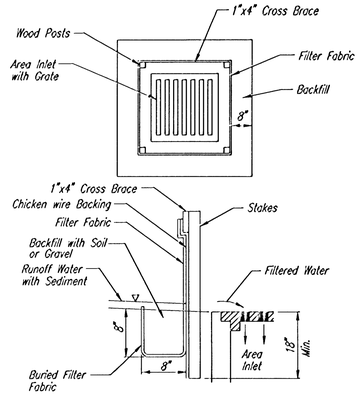

SILT FENCE BARRIERS FOR AREA INLETS
(INLET PROTECTION)

Material Specification:

Silt fence fabric should conform to the AASHTO M288 96 silt fence specification.
The wire or polymeric mesh backing used to help support the silt fence fabric should conform to the AASHTO M288 96 silt fence specification.
The posts used to support the silt fence fabric should be a hardwood material with the following minimum dimensions: 2" square (nominal) by 4' long.
The material used to frame the tops of the posts should be 1" by 4" boards.
Silt fence fabric and support backing should be attached to the wooden posts and frame with staples, wire, zip ties, or nails.

Placement:

Place a silt fence drop inlet barrier in a location where it is unlikely to be overtopped.
Water should flow through silt fence, not over it. Silt fence barriers for area inlets often fail when repeatedly overtopped.
When used as a barrier for area inlets, silt fence fabric and posts must be supported at the top by a wooden frame.
When a silt fence barrier for area inlets is located near an inlet that has steep approach slopes, the storage capacity behind the barrier is drastically reduced. Timely removal of sediment must occur for a barrier to operate properly in this location.

Proper installation method:

Excavate a trench around the perimeter of the area inlet that is at least 8" deep by 8" wide.
Drive posts to a depth of at least 18" around the perimeter of the area inlet.
The distance between posts should be 4' or less. If the distance between two adjacent corner posts is more than 4', add another post(s) between them.
Connect the tops of all the posts with a wooden frame made of 1" by 4" boards. Use nails or screws for fastening.
Attach the wire or polymeric-mesh backing to the outside of the post/frame structure with staples, wire, zip ties, or nails.
Roll out a continuous length of silt fence fabric long enough to wrap around the perimeter of the area inlet. Add more length for overlapping the fabric joint. Place the edge of the fabric in the trench, starting at the outside edge of the trench. Line all three sides of the trench with the fabric. Backfill over the fabric in the trench with the excavated soil and compact. After filling the trench, approximately 24" to 36" of silt fence fabric should remain exposed.
Attach the silt fence to the outside of the post/frame structure with staples, wire, zip ties, or nails. The joint should be overlapped to the next post.

Note: When a silt fence barrier for area inlet is placed in a shallow median ditch, make sure that the top of the barrier is not higher than the paved road. In this configuration, water may spread onto the roadway causing a hazardous condition.

List of common placement/installation mistakes to avoid:

Water should flow through a silt fence barrier for area inlet-not over it. Place a silt fence barrier for area inlet in a location where it is unlikely to be overtopped. Silt fence barrier for area inlets often fail when repeatedly overtopped.
Do not place posts on the outside of the silt fence barrier for area inlet. In this configuration, the force of the water is not resisted by the posts, but only by the staples (wire, zip ties, nails, etc.). The silt fence will rip and fail.
Do not install silt fence barrier for area inlets without framing the top of the posts.
The corner posts around area inlets are stressed in two directions whereas a normal silt fence is only stressed in one direction. This added stress requires more support.

Inspection and Maintenance:

Silt fence barrier for area inlets should be inspected every 7 days and within 24 hours of a rainfall of 1/2" or more. The following is a list of questions that should be addressed during each inspection:

Does water flow under the silt fence?
Does the silt fence sag excessively?
Has the silt fence torn or become detached from the posts?
Does sediment need to be removed from behind the area inlet barrier?

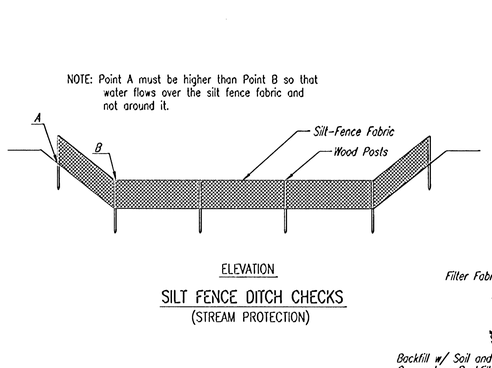

ELEVATION

SILT FENCE DITCH CHECKS
(STREAM PROTECTION)

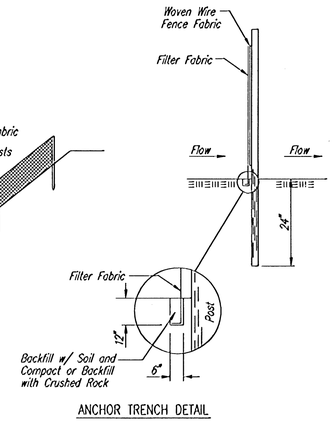

ANCHOR TRENCH DETAIL

Material Specification:

Silt fence fabric should conform to the AASHTO M288 96 silt fence specification.
The posts used to support the silt fence fabric should be a hardwood material with the following minimum dimensions: 2" square (nominal) by 4' long.
Silt fence fabric should be attached to the wooden posts with staples, wire, zip ties, or nails.

Placement:

Place silt fence in ditches where it is unlikely that it will be overtopped.
Water should flow through a silt fence ditch check, not over it. Silt fence ditch checks often fail when overtopped.
Silt fence ditch checks should be placed perpendicular to the flowline of the ditch.
The silt fence should extend far enough so that the ground level at the ends of the fence is higher than the top of the low point of the fence. This prevents water from flowing around the check.
Checks should not be placed in ditches where high flows are expected. Rock checks should be used instead.
Silt fence should be placed in ditches with slopes of 6% or less. For slopes steeper than 6%, rock checks should be used.

The following table provides check spacing for a given ditch grade:

Ditch grade (%)	Check Spacing (feet)
0.5	200
1.0	200
2.0	100
3.0	65
4.0	50
5.0	40
6.0	30

Proper installation method:

Excavate a trench perpendicular to the ditch flowline that is at least 12" deep by 6" wide.
Extend the trench in a straight line along the entire length of the proposed ditch check.
Place the soil on the upstream side of the trench for later use.
Roll out a continuous length of silt fence fabric on the downstream side of the trench.
Place the edge of the fabric in the trench starting at the top upstream edge of the trench.
Line two sides of the trench with the fabric as shown on detail. Backfill over the fabric in the trench with the excavated soil and compact. After filling the trench, approximately 24" to 36" of silt fence fabric should remain exposed.
Lay the exposed silt fence on the upstream side of the trench to clear an area for driving in the posts. Just downstream of the trench, drive posts into the ground to a depth of at least 24". Place posts no more than 4' apart.
Attach the silt fence to the anchored post with staples, wire, zip ties, or nails.

List of common placement/installation mistakes to avoid:

Water should flow through a silt fence ditch check-not over it. Place silt fence in ditches where it is unlikely that it will be overtopped. Silt fence installations quickly deteriorate when water overtops them.
Do not place silt fence posts on the upstream side of the silt fence fabric. In this configuration, the force of the water is not restricted by the posts, but only by the staples (wire, zip ties, nails, etc.). The silt fence will rip and fail.
Do not place a silt fence ditch check directly in front of a culvert outlet. It will not stand up to the concentrated flow.
Do not place silt fence ditch checks in ditches that will likely experience high flows. They will not stand up to concentrated flow.
Follow prescribed ditch check spacing guidelines. If spacing guidelines are exceeded, erosion will occur between the ditch checks.
Do not allow water to flow around the ditch check. Make sure that the ditch check is long enough so that the ground level at the ends of the fence is higher than the low point on the top of the fence.
Do not place silt fence ditch checks in channels with shallow soils underlain by rock. If the check is not anchored sufficiently, it will wash out.

Inspection and Maintenance:

Silt fence ditch checks should be inspected every 7 days and within 24 hours of a rainfall of 1/2" or more. The following is a list of questions that should be addressed during each inspection:

Does water flow around the ditch check?
Does water flow under the ditch check?
Does the silt fence sag excessively?
Has the silt fence torn or become detached from the posts?
Does sediment need to be removed from behind the ditch check?

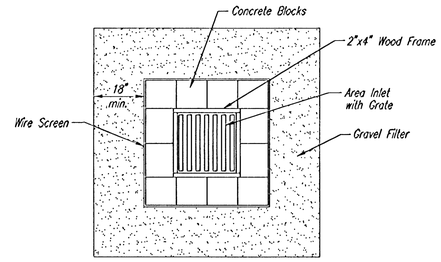

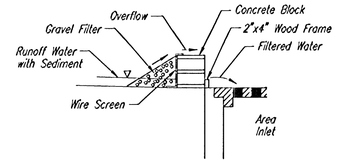

CONCRETE BLOCK FILTER FOR AREA DRAIN
(INLET PROTECTION)

Gravel barriers provide little filtering of large inflow waters. However, when installed correctly and maintained, they can effectively treat low runoff flows.

Placement of gravel filters around area drains must be completed in a manner that will not cause local flooding.

Gravel filters can be used if the immediate and adjacent area to the area drain consists of soil or pavement.

Only gravel filters are to be installed on top of the pavement.

Instructions for Installing:

STEP 1: Place concrete blocks around the grate. The blocks can be stacked one or two high and should be supported by a 2"x4" board.
STEP 2: Wrap 1/2" mesh wire screen around the concrete blocks.
STEP 3: Place 1" to 1-1/2" diameter rock around the blocks and wire screen. Be sure the rock extends down from the top of the concrete block.
STEP 4: To prevent damage to vehicles, signs warning drivers about the structures may be necessary.

An alternative method is use of gravel bags that are supported to prevent collapsing.

Use of rock having diameters smaller than 1" may result in clogging of pores and reduce the amount of water flowing into an inlet.

Maintenance:

All gravel filters installed around area drains should be inspected and repaired after each runoff event. Sediment should be removed when material is within 3" of the top of any block. Periodically, the gravel should be raked to increase infiltration and filtering of runoff waters. Accumulated sediment is to be removed immediately from roads and streets after every runoff event.

RECORD DRAWING

CITY OF WICHITA

SOIL EROSION BMP DETAILS

CHRISTOPHER M. CARRIER, P.E.
STORM WATER ENGINEER

PROJECT NUMBER	OCA NO.
468-83246	743885
DATE: MAY 2001	SHEET 18 OF 19

DSNR: MDK OPER: JLS SCALE: 1=1.00
O:\2001\01158\002\SEBMP_PEC_DTLS2-R14 08-24-2001 01:30:40 pm

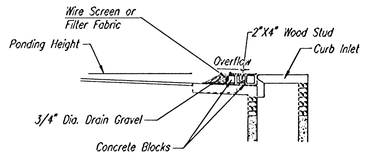

SECTION A-A

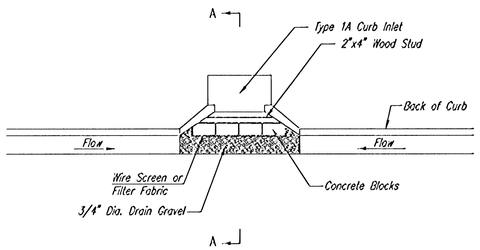

CURB INLET GRAVEL FILTERS
(INLET PROTECTION-RESIDENTIAL STREETS ONLY)

NOTE: Other types of curb inlet protection may be approved by the city so long as equal protection is provided.

A gravel inlet filter shall be installed at sump locations on residential streets. This type of protection is not to be used on arterial or collector streets at any time that it would pose an undue traffic hazard.

Instructions for Installing:

STEP 1: Place concrete blocks around the inlet as shown on drawing. Insert 2x4 board as shown.
STEP 2: Wrap 1/2" mesh wire screen around the concrete blocks.
STEP 3: Place 1" to 1-1/2" diameter rock around the blocks and wire screen. Be sure the rock extends down from the top of the concrete block.
STEP 4: To prevent damage to vehicles, signs warning drivers about the structures may be necessary. An alternative installation is the use of gravel bags supported by a 2"x4" board to prevent collapsing.

Use of rock with diameters smaller than 1" in the bag may result in clogging of pores and reduce the amount of water flowing into an inlet.

Maintenance:

All curb inlet gravel filters shall be inspected and repaired after each runoff event. Sediment deposits are to be removed once material is within 8 cm (3 inches) of the top of any block. Periodically, the gravel shall be raked to increase infiltration and filtering of runoff waters. Accumulated sediment is to be removed immediately from roads and streets.

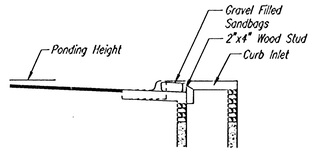

SECTION B-B

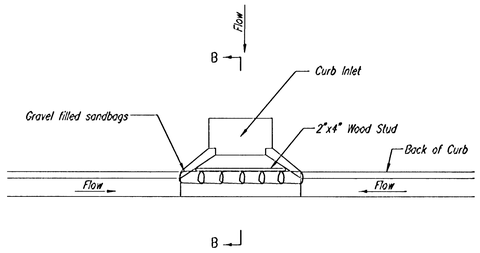

CURB INLET SANDBAG FILTERS
(INLET PROTECTION)

NOTE: Other types of curb inlet protection may be approved by the City so long as equal protection is provided.

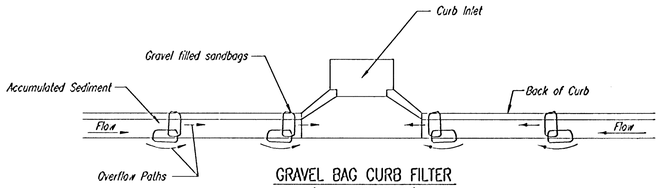

GRAVEL BAG CURB FILTER
(INLET PROTECTION)

NOTE: Place two or more sets of bags in a manner that results in maximum support. The flow line bag must be lower than top of curb.

CURB SEDIMENT TRAPS

When inlets are located on streets having a grade (i.e., sump conditions do not exist), installing gravel (or sand) bags in the gutter flow line to create small sediment traps can be considered. Gravel bags are recommended over sand bags to allow for drainage.

If the spacing between bags becomes too large, little sediment may be trapped. Spacing of bags should be completed using the table or graph that illustrates placement distances based upon street slope. When installed in the gutter, bag tops must be lower than the sidewalk.

Spacing:

Gravel bags are to be placed according to street grades using the following table or graph that appears below.

GRADE (%)	SPACING (FEET)
0.5	75
1.0	45
2.0	18
3.0	12
4.0	9
5.0	6

Maintenance:

Collected sediment shall be removed after every runoff event. Bags that are destroyed by vehicular traffic or through natural deterioration are to be immediately replaced.

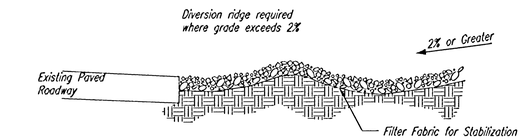

SECTION C-C

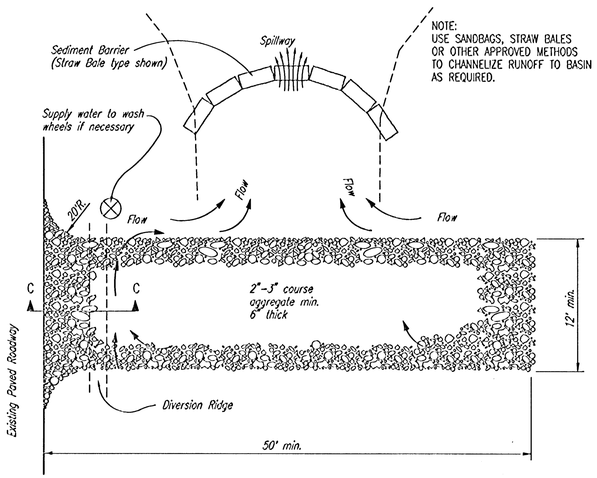

STABILIZED CONSTRUCTION ENTRANCE

NOTES:

1. THE ENTRANCE SHALL BE MAINTAINED IN A CONDITION THAT WILL PREVENT TRACKING OR FLOWING OF SEDIMENT ONTO PUBLIC RIGHTS-OF-WAY. THIS MAY REQUIRE TOP DRESSING, REPAIR AND/OR CLEANOUT OF ANY MEASURES USED TO TRAP SEDIMENT.
2. WHEN NECESSARY, WHEELS SHALL BE CLEANED PRIOR TO ENTRANCE ONTO PUBLIC RIGHT-OF-WAY.
3. WHEN WASHING IS REQUIRED, IT SHALL BE DONE ON AN AREA STABILIZED WITH CRUSHED STONE THAT DRAINS INTO AN APPROVED SEDIMENT TRAP OR SEDIMENT BASIN, AS SHOWN ABOVE.
4. DRIVE ENTRANCES ONTO RESIDENTIAL LOTS WILL NOT BE REQUIRED TO HAVE THE SEDIMENT BARRIER SHOWN, BUT WHEEL WASHING MAY BE REQUIRED IF STABILIZED ENTRANCE IS NOT SUFFICIENT TO KEEP MUD FROM BEING TRACKED ONTO ADJACENT STREET. ENTRANCE SHALL EXTEND FROM BACK OF CURB TO DWELLING.

28 MAR 02

RECORD DRAWING

CITY OF WICHITA

SOIL EROSION
BMP DETAILS

CHRISTOPHER M. CARRIER, P.E.
STORM WATER ENGINEER

PROJECT NUMBER	OCA NO.
468-89568	743885
DATE: MAY 2001	SHEET 19 OF 19

DSNR: MDK OPER: TLS SCALE: 1=1.00
Q:\2001\01158\002\SEEMP_PEC_DTLS3-R14 08-24-2001 01:31:24 pm

18-10-05-11