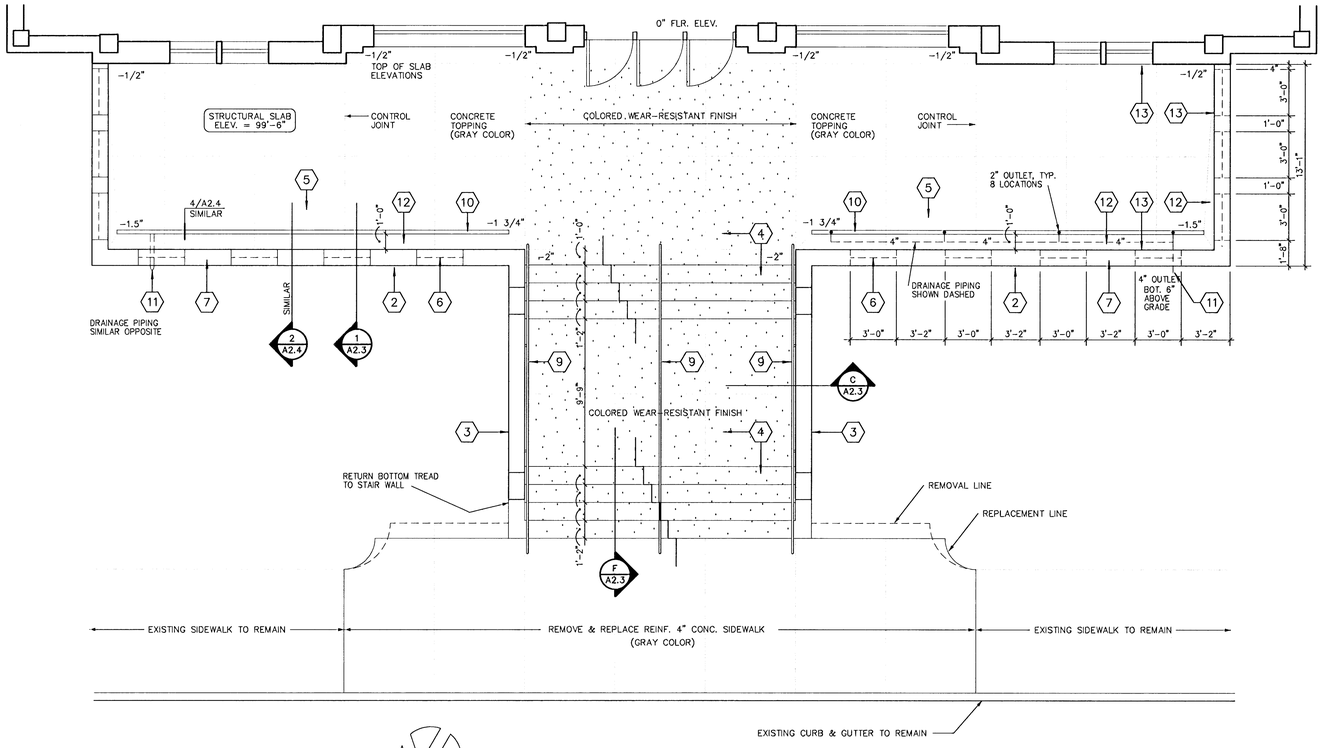

(A) FRONT (NORTH) TERRACE PLAN
SCALE: 1/4" = 1'-0"

KEYED NOTES

1. REPLACE STEEL LINTEL AND PAINT
2. RECONSTRUCT MASONRY WALLS W/ SALVAGED BRICK.
3. RECONSTRUCT MASONRY STAIR WALL W/ SALVAGED BRICK. (4" BRICK, 4" C.M.U., 4" BRICK)
4. NEW COLORED CONCRETE TOPPING @ STAIRS & LANDING.
5. NEW CONCRETE TOPPING @ TERRACE. SLOPE TO CHANNEL DRAINS.
6. REINSTALL SALVAGED & REPAINTED CAST ORNAMENTAL GRILLES.
7. NEW PRECAST ARCH. CONC. COPING. NEW CONCRETE CAPS TO MATCH PROFILE OF EXISTING.
8. SEAL COPING JOINTS, REFER SPEC.
9. NEW 1 1/2" STEEL HANDRAIL, PAINTED. ALL JOINTS WELDED & GROUND SMOOTH, TYPICAL.
10. NEW 3" CHANNEL DRAIN.
11. NEW 4" THRU-WALL SCUPPER.
12. SLOPE CONC. FROM TRENCH DRAIN BACK UP TO TOP OF PRE-CAST CONC. BELT COURSE.
13. SEALANT & BACKER ROD @ RAKED OUT JOINT @ PERIMETER OF CONCRETE TERRACE, TYPICAL.
14. PAINTED STEEL PIPE RAIL. @ PERIMETER OF CONCRETE TERRACE, TYPICAL.

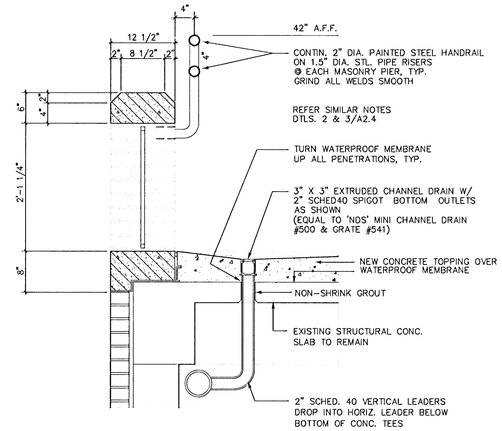

(1) SECTION @ C. I. GRILLEWORK
SCALE: 1" = 1'-0"

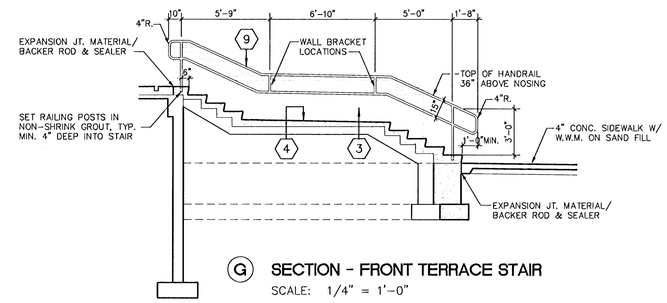

(G) SECTION - FRONT TERRACE STAIR
SCALE: 1/4" = 1'-0"

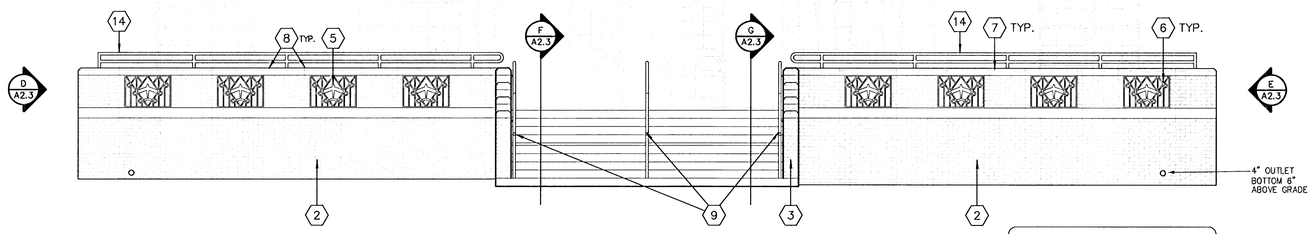

(B) FRONT (NORTH) TERRACE ELEVATION
SCALE: 1/4" = 1'-0"

NOTE:
THE TERRACE WALLS ARE TO BE TAKEN DOWN CAREFULLY TO AVOID DAMAGE TO MATERIALS THAT ARE NEEDED TO RECONSTRUCT WALLS. SALVAGE ALL EXISTING PRECAST & BRICK FOR RECONSTRUCTION IN SAME CONFIGURATION.

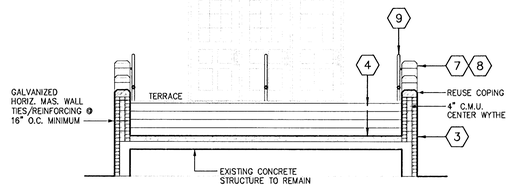

(C) SECTION - FRONT TERRACE
SCALE: 1/4" = 1'-0"

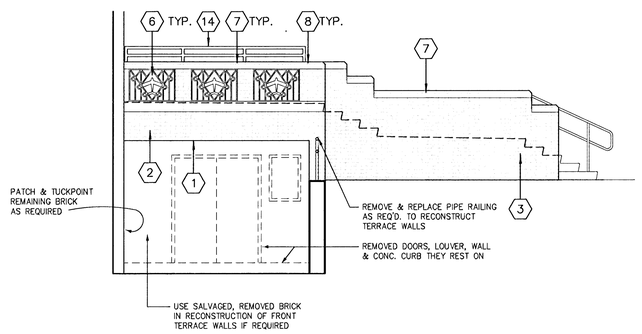

(D) EAST ELEVATION - FRONT TERRACE
SCALE: 1/4" = 1'-0"

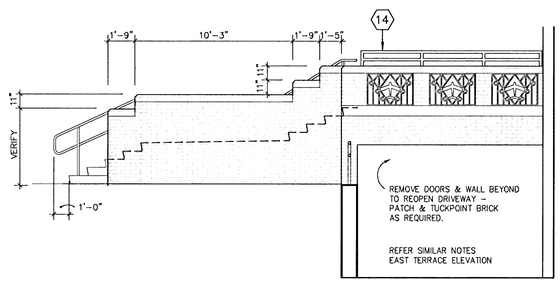

(E) WEST ELEVATION - FRONT TERRACE
SCALE: 1/4" = 1'-0"

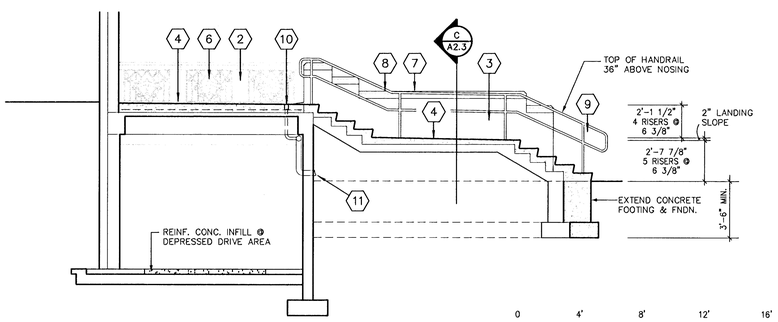

(F) SECTION - FRONT TERRACE
SCALE: 1/4" = 1'-0"

FRONT TERRACE DRAWINGS

M:\2632.10\A2-3
1/4" = 1'-0"

SCHAEFER JOHNSON COX FREY & ASSOCIATES PA
ARCHITECTURE ENGINEERING PLANNING & INTERIOR DESIGN
257 N. BROADWAY
WICHITA, KANSAS 67202-2317
(316) 684-0171
FAX (316) 684-8635

FEMA NO.	STATE	PROJECT NO.	YEAR	SHEET NO.	SHEETS
7	KANSAS	FEA T007(502) 087 TE-0075-02	2004	A2-3	15

SAMUEL JOHN FREY LICENSED PROFESSIONAL ENGINEER KANSAS

KANSAS AVIATION MUSEUM
3350 S. GEORGE WASHINGTON BOULEVARD WICHITA, KANSAS

REVISION DATE
PROJECT NO. 2632.10
DATE APRIL 2004
A2-3

©2000, SCHAEFER JOHNSON COX FREY & ASSOCIATES PA