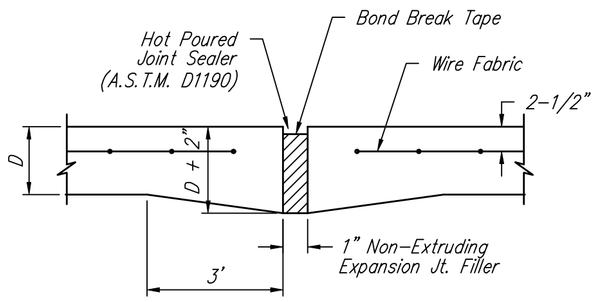

EXPANSION JOINT

NOTE: Extra Thickness to be Subsidiary to Price of Square Yards Pavement

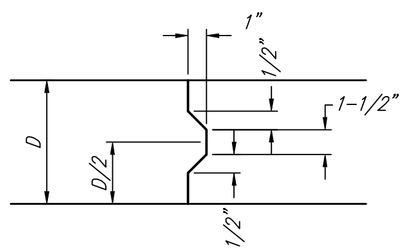

KEYWAY DETAIL

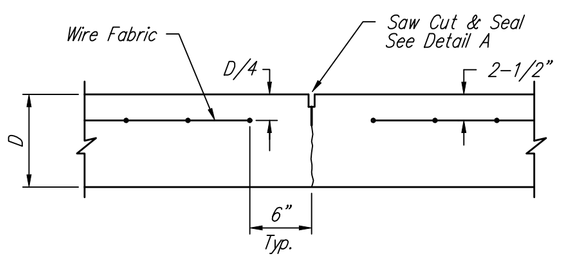

CONTRACTION JOINT DETAIL (C.J.)

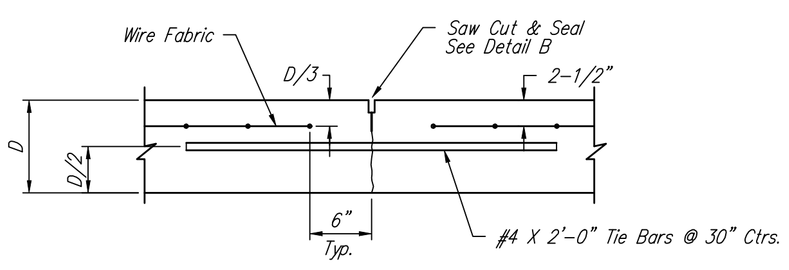

LONGITUDINAL JOINT DETAIL (L.J.)

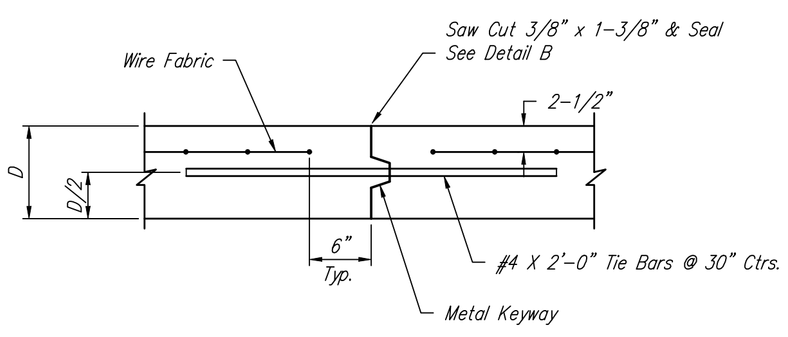

OPTIONAL LONGITUDINAL JOINT DETAIL (L.J.)
(CONSTRUCTION JOINT)

(TYPE A)
STANDARD WHEELCHAIR RAMP
WITH DETECTABLE WARNING
CONSTRUCTION DETAIL FOR STREETS
WITH COMBINED CURB & GUTTER

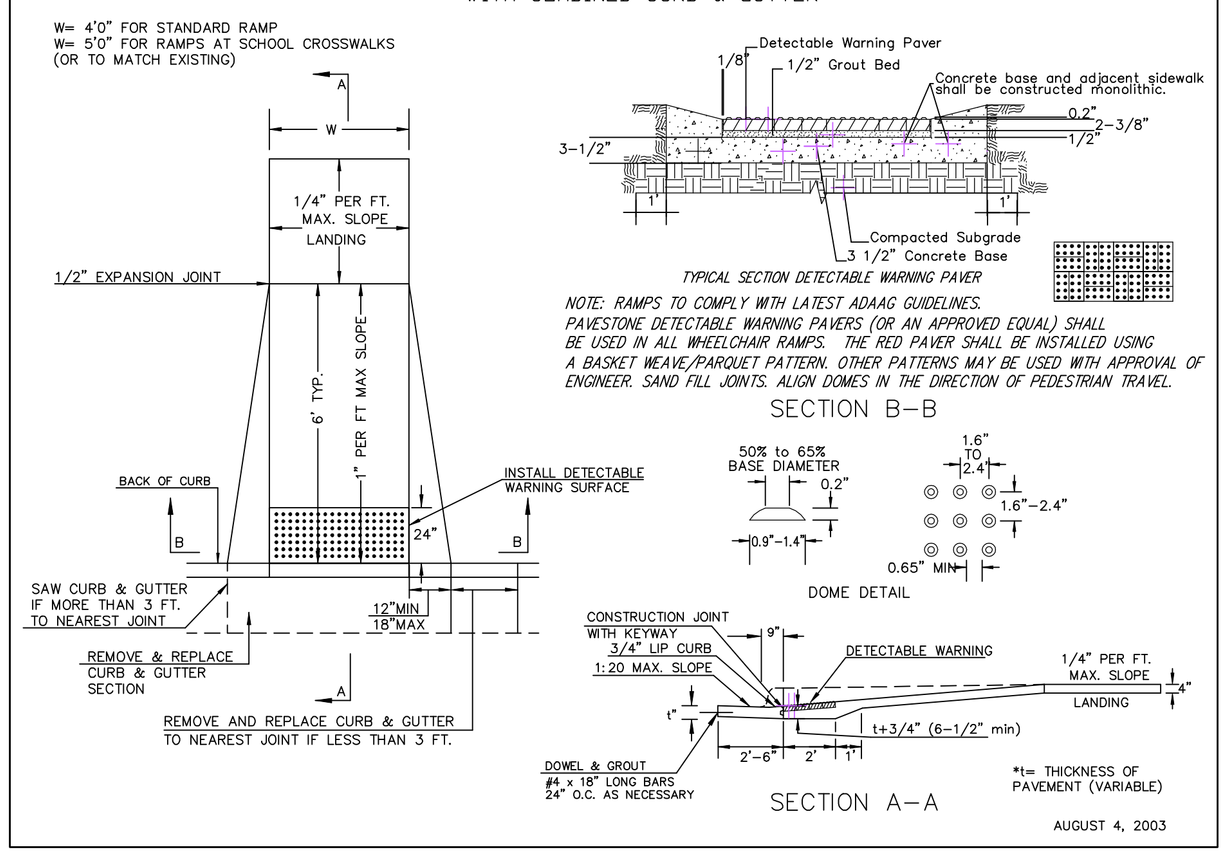

WHEELCHAIR RAMP DETAIL

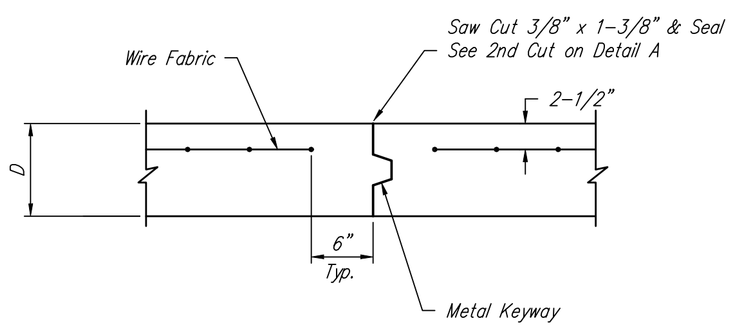

OPTIONAL CONTRACTION JOINT
(CONSTRUCTION JOINT)

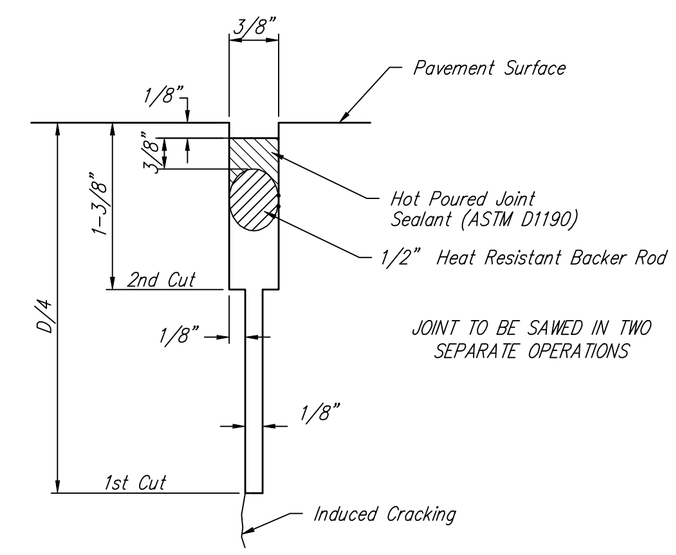

SAW JOINT DETAIL "A"

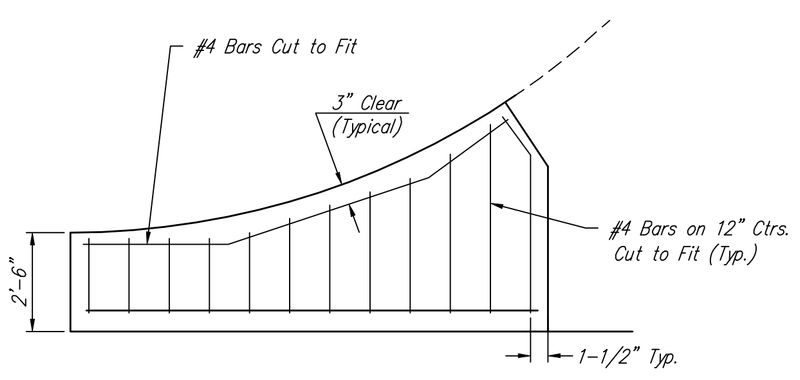

WING REINFORCING DETAIL

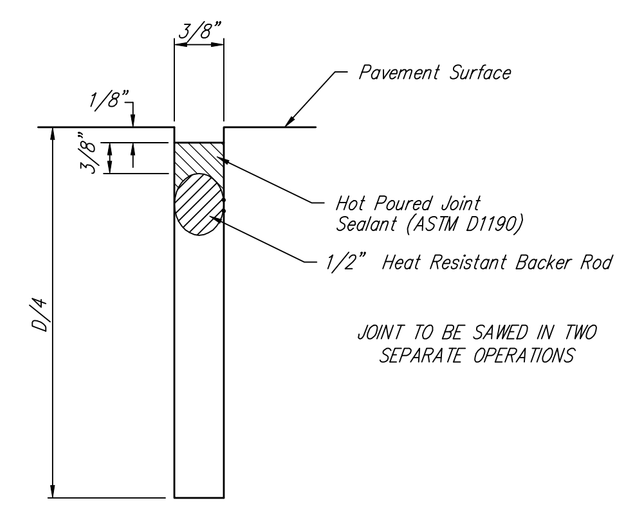

SAW JOINT DETAIL "B"

Scale: 1" = 20'

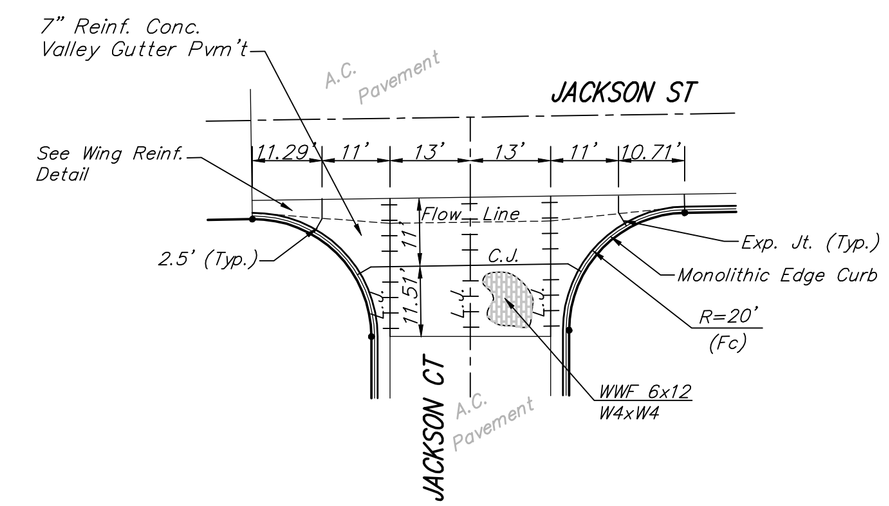

NOTE: 6" X 12" W4XW4 Wire Fabric Reinforcing Shall Be Placed So That The Wires With The 6" Spacing Will Run Parallel With The Longitudinal Joints.

Baughman

VALLEY GUTTER DETAILS

Baughman Company, P.A. 315 Ellis St. Wichita, KS 67211 P 316-262-7271 F 316-262-0149
ENGINEERING | SURVEYING | PLANNING | LANDSCAPE ARCHITECTURE

PROJECT NUMBER 181PPP (607879)	DESIGN STAFF / DRAWN STAFF
REVISIONS:	APPROVED / DATE 06/07
	SCALE NONE
	SHEET 4 OF 18

/Vgdetail