LANDSCAPE PLAN
1 of 2
Cup DP-299
Page 7
APPROVED 5/15/25

PROPOSED LANDSCAPE LEGEND

(4) 2" CAL. OVERSTORY DECIDUOUS TREE

REV. 4-4-25 (25) 18" min. EVERGREEN SHRUBS

(29) 18" min. DECIDUOUS SHRUBS

(20,382 s.f.) TURF - SOD (Turf Type Fescue)

4" MIN. THICK WHITE DECORATIVE ROCK MULCH W/FABRIC - SEE SPECS.

20 0 10 20 40
(IN FEET)
1 inch = 20 ft.

ABBREVIATIONS

CL	- Centerline
C.O	- Cleanout
D.S	- Downspout
E.P	- Edge Of Pavement
F.F.	- Finished Floor
F.G.	- Finished Grade
FL	- Flowline
G.L.	- Gutterline
L.S.	- Light Standard
(T.B.R.)	- To Be Removed
T.O.C.	- Top Of Curb
T.P.	- Top Of Pavement
T.O.W.	- Top Of Wall
C.M.	- Concrete Monument
T.Wk	- Top Of Walk
PL	- Property Line
A.I.	- Area Inlet
R/W	- Right Of Way
G.I.	- Grate Inlet
M.H.	- Manhole
O.I.P.	- Old Iron Pipe
R.	- Radius
P.B.	- Plat Book
D.B.	- Deed Book
T.Bk.	- Top Of Bank
T.S.	- Toe Of Slope
C.M.P.	- Corrugated Metal Pipe
P.V.C.	- Polyvinyl Chloride Pipe
V.C.P.	- Vitrified Clay Pipe
C.P.	- Non-Reinforced Concrete Pipe
R.C.P.	- Reinforced Concrete Pipe
D.I.P.	- Ductile Iron Pipe
F/F	- Face to Face
B/B	- Back to Back
(U.I.P.)	- Use In Place
B.W.	- Bottom Of Wall
T.I.	- Top Of Island
T.G.	- Top Of Grade
(Typ.)	- Typical
Conc.	- Concrete
REF	- Refer
DET.	- Detail
U.P.	- Utility Pole

LANDSCAPE CALCULATIONS

LANDSCAPE STREET YARD REQUIREMENT
52,872 s.f. Street Yard s.f./15 = 3,524.8 or 3,525 s.f.
Average Lot Depth - 270 ft.
Square Foot Factor = 15
3,525/250 = (9) Shade Trees required

SUBSTITUTE TREES WITH SHRUBS
(9) Street Yard Trees/3 = 2.3 or (3)
3 x 10 = (30) Shrubs required in lieu of (3) Street Yard Trees

TOTAL STREET YARD REQUIRED/PROVIDED
(4) Street Yard Trees
(30) Shrubs

PARKING LOT SCREENING AND LANDSCAPING
Proposed Parking Spaces - (10)
Less than (20) spaces per ordinance. No screening required.

Screening Requirements
236'-0" l.f. Frontage x 2/3 = 155 l.f./3 o.c.
= 52 shrubs required
(30) proposed landscape yard shrubs + (22) additional shrubs required

LANDSCAPE NOTES

1. ALL LANDSCAPED AREAS ARE TO RECEIVE A MINIMUM OF 4" OF TOPSOIL. SEE 2900 SPECIFICATION.
2. ALL PLANT MATERIAL SHALL BE HEALTHY, VIGOROUS, AND FREE OF PESTS AND DISEASE.
3. ALL PLANT MATERIAL SHALL BE CONTAINER GROWN OR BALLED AND BUR LAPPED AS INDICATED IN THE PLANT LIST.
4. ALL TREES SHALL HAVE A STRAIGHT TRUNK AND FULL HEAD AND MEET ALL REQUIREMENTS SPECIFIED
5. ALL MATERIALS ARE SUBJECT TO THE APPROVAL OF THE LANDSCAPE ARCHITECT BEFORE, DURING, AND AFTER INSTALLATION
6. ALL TREES MUST BE GUYED OR STAKED AS SHOWN IN THE DETAILS.
7. ALL PLANTING AREAS SHALL BE COMPLETELY MULCHED AS SPECIFIED
8. PRIOR TO CONSTRUCTION. THE CONTRACTOR SHALL BE RESPONSIBLE FOR LOCATING ALL UNDERGROUND UTILITIES AND SHALL AVOID DAMAGE TO ALL UTILITIES DURING THE COURSE OF THE WORK. LOCATIONS OF EXISTING BURIED UTILITY LINES SHOWN ON THE PLANS ARE BASED UPON BEST AVAILABLE INFORMATION AND ARE TO BE CONSIDERED APPROXIMATE. IT SHALL BE THE RESPONSIBILITY OF THE CONTRACTOR: 1) TO VERIFY THE LOCATIONS OF UTILITY LINES AND ADJACENT TO THE WORK AREA 2) TO PROTECT OF ALL UTILITY LINES DURING THE CONSTRUCTION PERIOD 3) TO REPAIR ANY AND ALL DAMAGE TO UTILITIES, STRUCTURES, SITE APPURTENANCES, ETC. WHICH OCCURS AS A RESULT OF THE CONSTRUCTION.
9. THE CONTRACTOR SHALL BE RESPONSIBLE FOR VERIFYING ALL QUANTITIES SHOWN ON THESE PLANS BEFORE PRICING THE WORK.
10. CONTRACTOR SHALL BE RESPONSIBLE FOR DELIVERY SCHEDULE AND PROTECTION BETWEEN DELIVERY AND PLANTING PER SPECIFICATIONS TO MAINTAIN HEALTHY PLANT CONDITIONS.
11. THE CONTRACTOR SHALL BE RESPONSIBLE FOR FULLY MAINTAINING (INCLUDING BUT NOT LIMITED TO: WATERING, SPRAYING, MULCHING, FERTILIZING, ETC.) ALL OF THE PLANT MATERIALS AND LAWN FOR THE PERIOD OF TIME SHOWN IN THE 02900 SPEC.
12. ANY PLANT MATERIAL WHICH IS DISEASED, DISTRESSED, DEAD, OR REJECTED (PRIOR TO SUBSTANTIAL COMPLETION) SHALL BE PROMPTLY REMOVED FROM THE SITE AND REPLACED WITH MATERIAL OF THE SAME SPECIES, QUANTITY, AND SIZE AND MEETING ALL PLANT LIST SPECIFICATIONS.
13. THE CONTRACTOR SHALL COMPLETELY GUARANTEE ALL PLANT MATERIAL FOR A PERIOD DEFINED IN THE 02900 SPEC. THE CONTRACTOR SHALL PROMPTLY MAKE ALL REPLACEMENTS DURING THE NORMAL PLANTING SEASON.
14. AFTER BEING DUG AT THE NURSERY SOURCE, ALL TREES IN LEAF SHALL BE ACCLIMATED FOR TWO (2) WEEKS UNDER A MIST SYSTEM PRIOR TO INSTALLATION.
15. STANDARDS SET FORTH IN "AMERICAN STANDARD FOR NURSERY STOCK" REPRESENT GUIDELINE SPECIFICATIONS ONLY AND SHALL CONSTITUTE MINIMUM QUALITY REQUIREMENTS FOR PLANT MATERIAL.
16. WHERE SHOWN ON THE PLANS AND DETAILS, PLANTING BEDS ARE TO BE COMPLETELY COVERED WITH A HARDWOOD MULCH FROM A LOCAL SOURCE HARVESTED IN A SUSTAINABLE MANNER TO A MINIMUM DEPTH OF FOUR INCHES.
17. REFER TO WALMART SPECIFICATIONS FOR INFORMATION NEEDED FOR IMPLEMENTATION OF PLANTING PLANS.
18. WEED MAT IS REQUIRED IN LANDSCAPED ISLANDS AS SPECIFIED. SEE IRRIGATION DETAILS.
19. ALL PLANT MATERIAL QUANTITIES SHOWN ARE APPROXIMATE. CONTRACTOR SHALL BE RESPONSIBLE FOR COMPLETE COVERAGE OF ALL PLANTING BEDS AT SPACING SHOWN.
20. THIS PLAN IS TO BE IMPLEMENTED COOPERATIVELY WITH SWPPP PLAN, AS NEEDED, TO MAXIMIZE THE EFFECTIVENESS OF THE SWPPP PLAN FOR THIS SITE.
21. THE CONTRACTOR IS ENCOURAGED TO COMPLETE TEMPORARY OR PERMANENT SEEDING OR SODDING IN STAGES FOR SOIL STABILIZATION AS AREAS ARE COMPLETED AFTER GRADING.
22. THIS PLAN DOES NOT PRESENT ANY TEMPORARY STABILIZATION REQUIRED AS PART OF SWPPP PLAN.

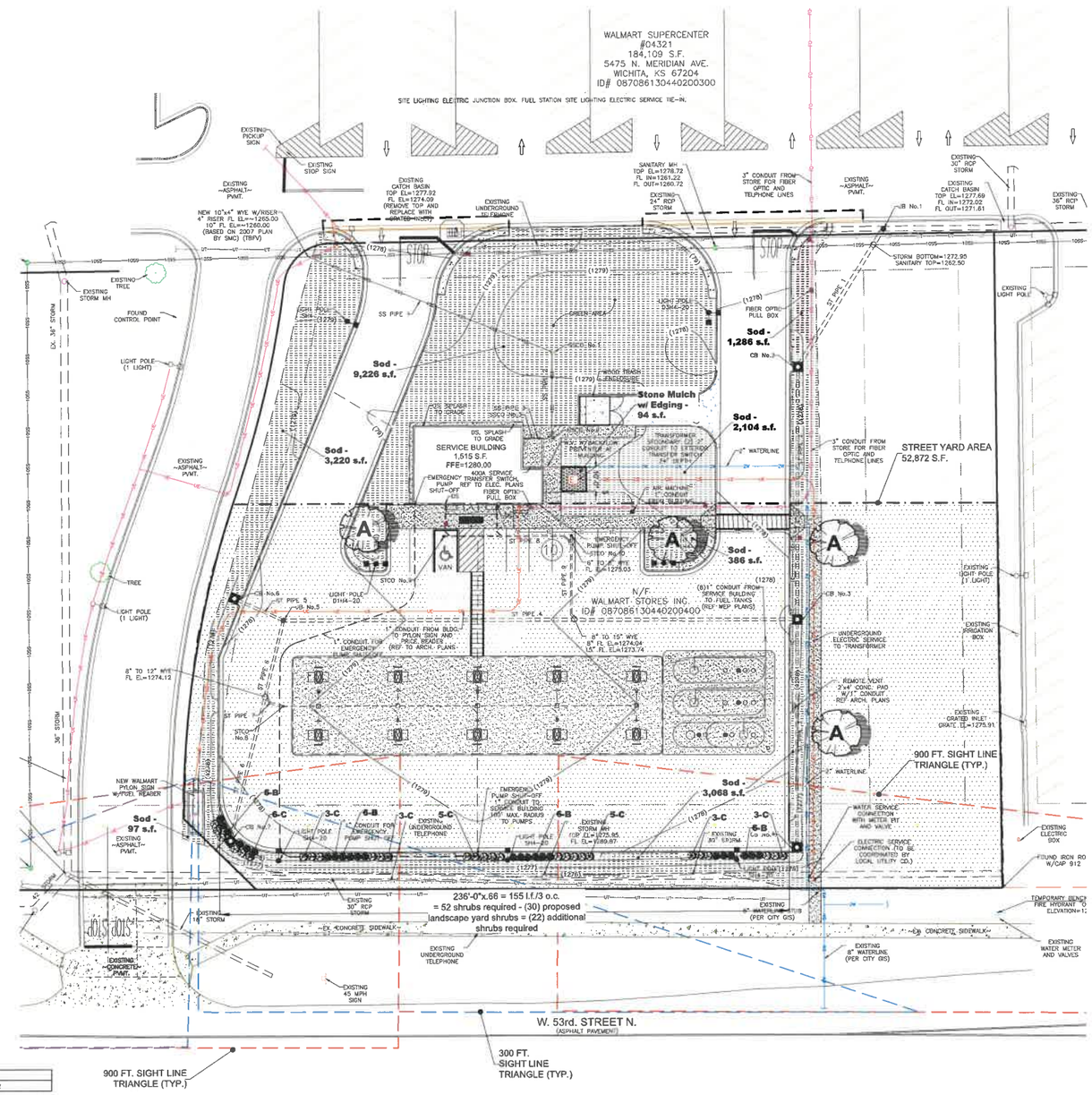

EXTERIOR PLANT SCHEDULE

Project Name:	WALMART – Wichita, KS #04321-1001	Date:	April 4, 2025
		Project No.	GDS #025-02

	Symbol	COMMON NAME (Scientific Name)	Size	Quantity	Remarks
	A	GREEN VASE ZELKOVA (Zelkova serrata "Green Vase")	2" cal.	4	Mature height 50-80 ft.
REV 4-4-25	B	EVERLOW YEW (Taxus x media 'Everlow')	18" min.	25	3 ft. o.c. – Full Form/Matching
REV 4-4-25	C	LITTLE PRINCESS SPIREA (Spirea japonica "Little Princess")	18" min.	27	3 ft. o.c. – Full Form/Matching
REV 4-4-25		SOD	S.F.	19,063	See Specs – Turf Type Fescue
REV 4-4-25		SHREDDED BARK MULCH (Shrubs and Trees)	C.Y.	7	See Specs – 4" layer
REV 4-4-25		STONE MULCH w/FABRIC	S.F.	94	See Specs – 4" layer
REV 4-4-25		BED PREPARATION (Planting Beds)	S.F.	473	See Specs
		STEEL LANDSCAPE EDGING	L.F.	40	See Specs
REV 4-4-25		PLANTING SOIL MIX (Trees and Shrubs)	C.Y.	44	See Specs. – 2 ft. Depth

PERMANENT GRASS CHART

SYMBOL	ACREAGE	VARIETY	SEEDING RATE
SOD			
	.437	TURF TYPE FESCUE	N/A

LANDSCAPE REQUIREMENTS

TYPE	LOCATION	AHJ REQUIRED	PROVIDED
TREES	ISLANDS	-	-
	PERIMETER	4	4
	MITIGATED	-	-
SHRUBS	ISLANDS	-	-
	PERIMETER	52	52
GROUNDCOVER	ALL	-	-

REV 4-4-25

LANDSCAPE PLAN - PROPOSED FUEL STATION

PLAN NOTES
1. Contractor to review and field verify existing and proposed conditions prior to installation.
2. Contractor to notify Owner Representative of any discrepancies.
3. Contractor to coordinate with other trades.
4. Contractor to adjust plantings accordingly, notify Owner Representative of any major changes.
5. Proposed plant material is to be selected by the contractor and approved by Owner Representative or Landscape Architect prior to installation.
6. Tree locations and planting beds to be located by the contractor and approved by Owner Representative or Landscape Architect prior to installation.
7. Quantity of sod shown is for bidding purposes only. Submit unit cost for any additional cost or credit.
8. Plantings shall not prohibit site distance requirements.
9. Proposed conditions based on latest plans prepared by BFA, Inc. Refer to Civil Plans for proposed site development and grading requirements.
10. The minimum distance between the tree and the back of street curb shall be two and one-half feet. In areas where a sidewalk exists or is proposed, the minimum distance between the tree trunk and both the edge of the street and the sidewalks shall be two feet.
11. Refer to Sheet L-2 for Landscape Details.
12. Refer to Sheet L-2 and L-3 for Irrigation Sprinkler Plans.

DETAILS
1/L-2 LARGE TREE PLANTING (SEE DETAIL SHEET L-2)
2/L-2 SHRUB/GROUND COVER PLANTING (SEE DETAIL SHEET L-2)
3/L-2 TREE FROG DETAIL (SEE DETAIL SHEET L-2)

REVISIONS:
4-4-25 City Comments

GDS Project No:
025-02

E:\Projects\025-02-WM-04321-1001 Wichita, KS\CAD\-Walmart-#04321-1001-Wichita-R-REV 4-4-25

ALERT TO CONTRACTOR:
ALL WM GENERAL CONTRACTOR WORK TO BE COMPLETED (EARTHWORK, FINAL UTILITIES, AND FINAL GRADING) BY THE MILESTONE DATE IN PROJECT DOCUMENTS. OUTLOT AREA TO BE KEPT FREE OF JOB TRAILERS AND STORAGE AFTER THE CONTRACT MILESTONE DATE FOR THE OUTLOT. WM GENERAL CONTRACTOR TO PROVIDE CLEAR ACCESS FOR OUTLOT CONTRACTOR TO THE SPECIFIC PARCEL AT ALL TIMES AFTER MILESTONE DATE. PURCHASER OF OUTLOT TO PROVIDE PERMIT DOCUMENTS AND SWPPP REQUIRED BY STATE/LOCAL REQUIREMENTS FOR SPECIFIC OUTLOT.

Kansas 811
Know what's below. Call 811 before you dig.
One free, easy call gets your utility lines marked AND helps protect you from injury and expense.
Safe Digging Is No Accident
"Assume Call Before You Dig or Dynamite"
Call 811, 1-800-344-7233, (800-344-7233) or visit us at www.kansas811.com.

Underground facilities, structures & utilities have been plotted from available survey, records & information, and therefore, do not necessarily reflect the actual existence, nonexistence, size, type, number of, or location of these services, structures, & utilities. The contractor shall be responsible for determining the actual location of all underground facilities, structures, & utilities, and for notifying owners of these utilities of the existence of such facilities, structures, & utilities shall be located in the field prior to any grading, excavation or construction of improvements.

A record original of this document is on file at the office of GATEWAY DESIGN STUDIO, L.L.C. Any unauthorized alterations or changes made without the expressed consent from GATEWAY DESIGN STUDIO, L.L.C shall deem us not responsible for any said alterations and changes.

REVISIONS	BY
4-4-25 City Comments	

PREPARED BY:
GDS Gateway Design Studio
planning
landscape architecture
environmental design
Vision...Sustainability...Purpose!
Established: 1992
(c) 2025 Gateway Design Studio, L.L.C.
Suite 200
ph 316.263.1900 web www.gatewayds.com

Clark Certified Landscape Architects
KS PRESIDENTIAL NO. 1
CLARK CASTLEY NALDER ALLISTON
CLARK L. NALDER #1751
4-4-25

This set of plans is subject to the document GATEWAY DESIGN STUDIO, L.L.C. Terms and Conditions. Reuse of these plans, specifications, estimates, reports or other documents is subject to written authorization and compensation by GATEWAY DESIGN STUDIO, L.L.C.

Prepared For:
BFA, Inc.
103 Elm Street
Washington, MO 63090
Office: 636.239.4751

Walmart #04321-1001
2702 West 53rd. Street North,
Wichita, KS 67204
Walmart Stores, Inc. 2608 SE J Street
Bentonville, AR 72716

DRAWN	RPW/BLB
CHECKED	RPW
DATE	2/11/25
SCALE	1" = 20 FT.
JOB No.	XXXX
SHEET	L-1

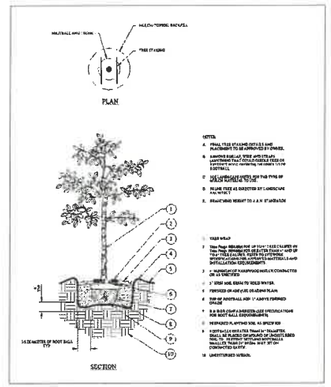

1 L-2 LARGE TREE PLANTING DETAIL
N.T.S.

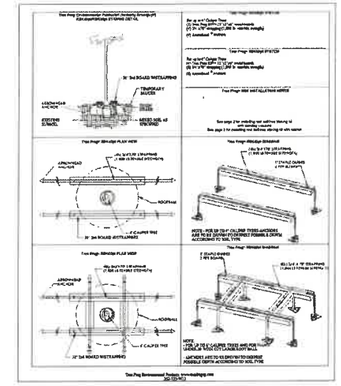

3 L-2 TREE FROG DETAIL
N.T.S.

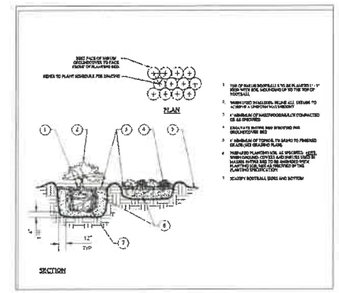

2 L-2 SHRUB PLANTING DETAIL
N.T.S.

REVISIONS	BY
4-4-25 City Comments	

PREPARED BY:

GDS
Gateway Design Studio
planning
landscape architecture
environmental design
Vision...Sustainability...Purpose!
Established: 1992

© 2015 Gateway Design Studio
Suite 200
Ph: 913.831.1550 St. Louis, mo. 63021
www.gateway-design-studio.com

CLARB CERTIFIED LANDSCAPE ARCHITECT
BL THOMAS VARNER, ASLA, RLA
CLARB Certified Landscape Architect
Council Bluffs (50501)
4-4-25

This set of drawings exists only as a file document. GATEWAY DESIGN STUDIO, L.L.C. assumes no responsibility for any alterations, specifications, materials, reports, or other documents or instruments making up these drawings, after they have left our office.

Prepared For:
BFA, Inc.
103 Elm Street
Washington, MO 63090
Office: 636.239.4751

Walmart #04321-1001
2702 West 53rd. Street North,
Wichita, KS 67204
Walmart Stores, Inc. 2608 SE J Street
Bentonville, AR 72716

LANDSCAPE PLAN
APPROVED 7/1/25 BY
cup DP-299 2 of 2

LANDSCAPE DETAILS

PLAN NOTES
1. Contractor to review and field verify existing and proposed conditions prior to installation.
2. Contractor to notify Owner Representative of any discrepancies.
3. Contractor to coordinate with other trades.
4. Contractor to adjust plantings accordingly, notify Owner Representative of any major changes.
5. Proposed plant material is to be selected by the contractor and approved by Owner Representative or Landscape Architect prior to installation.
6. Tree locations and planting beds to be located by the contractor and approved by Owner Representative or Landscape Architect prior to installation.
7. Quantity of sod shown is for bidding purposes only. Submit unit cost for any additional cost or credit.
8. Plantings shall not prohibit site distance requirements.
9. Proposed conditions based on latest plans prepared by BFA, Inc. Refer to Civil Plans for proposed site development and grading requirements.
10. The minimum distance between the tree and the back of street curb shall be two and one-half feet. In areas where a sidewalk exists or is proposed, the minimum distance between the tree trunk and both the edge of the street and the sidewalks shall be two feet.
11. Refer to Sheet L-1 for Proposed Fuel Station Landscape Plan.
12. Refer to Sheet L-1 and L-2 for Irrigation Sprinkler Plans.

REVISIONS:
4-4-25 City Comments

GDS Project No:
025-02

G:\Projectfiles\2025-Projects\025-02-WM-04321-1001 Wichita, KS
\CAD\L-Walmart-04321-1001-Wichita.S-REV 4-4-25

DRAWN	RJW/BLB
CHECKED	RJW
DATE	2/11/25
SCALE	1" = 20 FT.
JOB No.	XXXX
SHEET	L-2

Kansas 811
Know what's below. Call 811 before you dig.
One free, easy call gets your utility lines marked AND helps protect you from injury and expense.
Safe digging is no accident!
"Always Call Before You Dig in Kansas"
Call 811, 1-800-344-7233, 1-800-344-7233 or visit us at www.kansas811.com

Underground facilities, structures & utilities have been plotted from available surveys, records & information, and must be considered approximate and not necessarily all inclusive. The Contractor shall be responsible for verifying the actual location of these facilities, structures, & utilities. The Contractor shall be responsible for verifying the actual location of all underground facilities, structures, & utilities, either shown or not shown on these plans. The underground facilities, structures, & utilities shall be located in the field prior to any grading, excavation or construction of improvements.

A record original of this document is on file at the office of GATEWAY DESIGN STUDIO, L.L.C Any unauthorized alterations or changes made without the expressed consent from GATEWAY DESIGN STUDIO, L.L.C shall deem us not responsible for any said alterations and changes.

ALERT TO CONTRACTOR:
ALL WM GENERAL CONTRACTOR WORK TO BE COMPLETED (EARTHWORK, FINAL UTILITIES, AND FINAL GRADING) BY THE MILESTONE DATE IN PROJECT DOCUMENTS. OUTLOT AREA TO BE KEPT FREE OF JOB TRAILERS AND STORAGE AFTER THE CONTRACT MILESTONE DATE FOR THE OUTLOT. WM GENERAL CONTRACTOR TO PROVIDE CLEAR ACCESS FOR OUTLOT CONTRACTOR TO THE SPECIFIC PARCEL AT ALL TIMES AFTER MILESTONE DATE. PURCHASER OF OUTLOT TO PROVIDE PERMIT DOCUMENTS AND SWPPP REQUIRED BY STATE/LOCAL REQUIREMENTS FOR SPECIFIC OUTLOT.