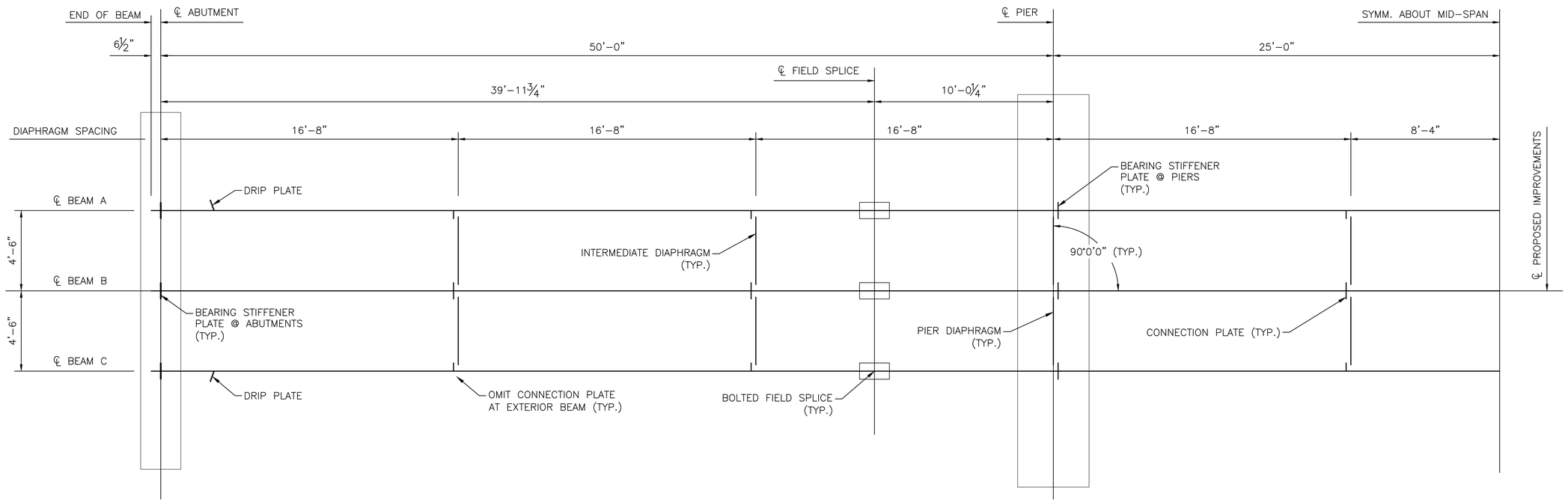

FRAMING PLAN

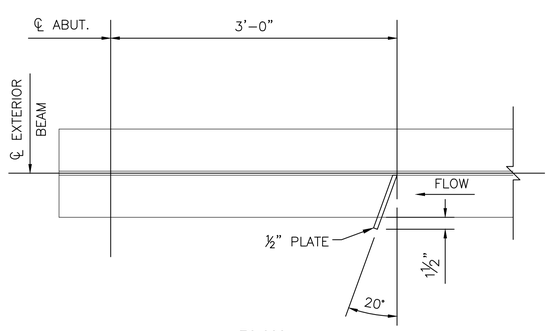

PLAN

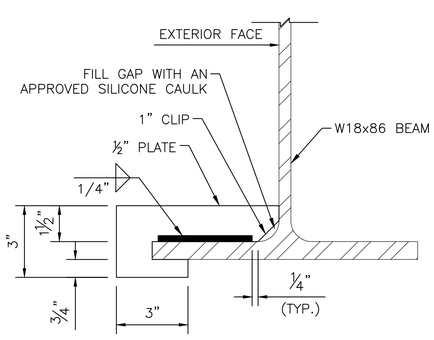

ELEVATION

DRIP PLATE DETAIL

DRIP PLATES ARE LOCATED ON THE EXTERIOR BEAMS AS SHOWN ON FRAMING PLAN

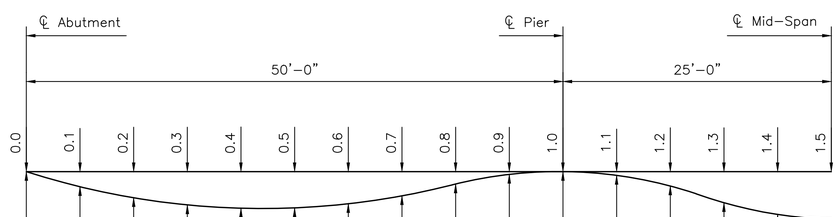

	0.0	0.1	0.2	0.3	0.4	0.5	0.6	0.7	0.8	0.9	1.0	1.1	1.2	1.3	1.4	1.5
DEAD LOAD (STEEL)	0.000	0.007	0.023	0.040	0.053	0.057	0.051	0.040	0.023	0.007	0.000	0.008	0.025	0.042	0.055	0.060
DEAD LOAD (CONCRETE)	0.000	0.034	0.105	0.180	0.234	0.253	0.234	0.178	0.105	0.033	0.000	0.037	0.112	0.191	0.248	0.269
TOTAL DEAD LOAD	0.000	0.041	0.128	0.220	0.287	0.310	0.285	0.218	0.128	0.040	0.000	0.045	0.137	0.233	0.303	0.329

DEAD LOAD DEFLECTION (INCHES) DIAGRAM AT TENTH POINTS

MKEC
Wichita, KS • 316.684.9600

IMPROVEMENT PLANS FOR
15TH STREET BRIDGE OVER THE WICHITA DRAINAGE CANAL
WICHITA, KS

FRAMING PLAN

PROJECT NO. 472-2023-085864
SCALE NTS

DRAWN	DESIGNED	CHECKED
RAM	DMU	JTH

NO.	REVISION	DATE
0	ISSUED FOR CONSTRUCTION	8-1-2025

SHEET NO.
39 OF 114

©2025 MKEC ENGINEERING, INC. ALL RIGHTS RESERVED WWW.MKEC.COM. THESE DRAWINGS AND THEIR CONTENTS, INCLUDING, BUT NOT LIMITED TO, ALL CONCEPTS, DESIGNS, & IDEAS ARE THE EXCLUSIVE PROPERTY OF MKEC ENGINEERING, INC. (MKEC), AND MAY NOT BE USED OR REPRODUCED IN ANY WAY WITHOUT THE EXPRESS CONSENT OF MKEC.

J:\PROJECTS\2023\2010\0431_COV_WDC BRIDGE REPLACEMENT AT 15TH STREET\00 230431 CAD\SHTS\05 CIVIL\BRIDGE\230431_BEAM DETAILS.DWG
PLOTTED: Friday, August 01, 2025 @ 02:49PM