STATE	PROJECT NO.	YEAR	SHEET NO.	TOTAL SHEETS
KANSAS	472-2023-085864	2025	48	114

✳Note: The Grading Contractor shall excavate the channel to the limits shown prior to the construction of the box bridge, unless otherwise noted in the plans.

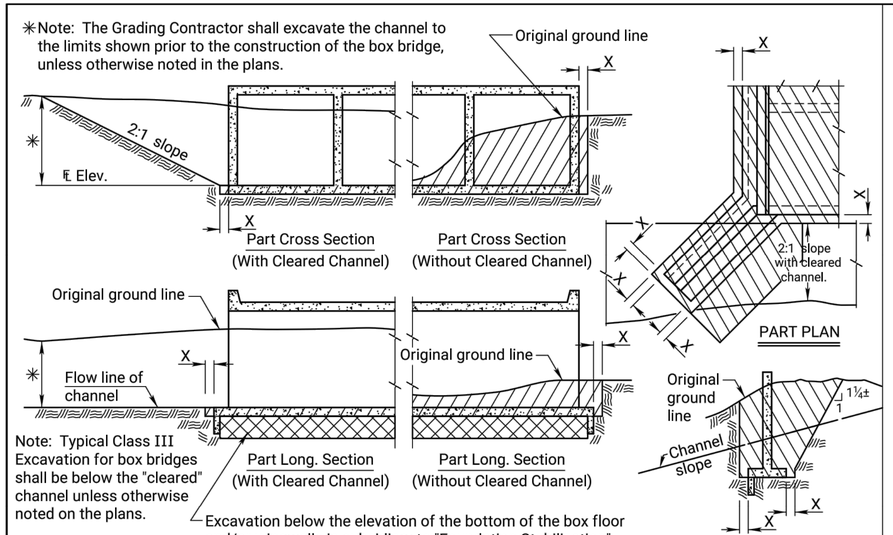

Note: Typical Class III Excavation for box bridges shall be below the "cleared" channel unless otherwise noted on the plans.

Excavation below the elevation of the bottom of the box floor and/or wingwalls is subsidiary to "Foundation Stabilization".

EXCAVATION DETAILS FOR REINFORCED CONCRETE BOX CULVERT

Note: Excavation for culverts less than bridge length and the additional excavation for "Embedded Structures" shall not be paid for as Class III Excavation, but shall be subsidiary to Grade 4.0 Concrete.

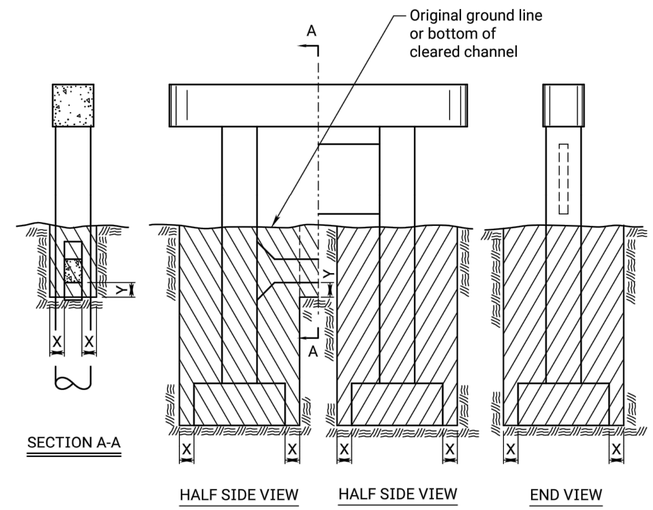

EXCAVATION DETAILS FOR TYPICAL PIERS

See detail when rock or shale (rock) is encountered. ⊛

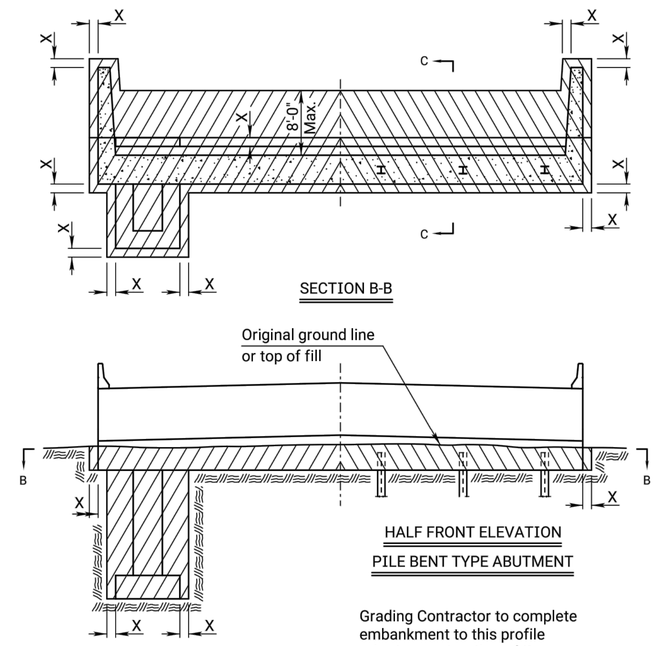

Note: Bridge Contractor shall finish the embankment and berms after the construction of the abutment and dispose of any excess material as approved by the Engineer.

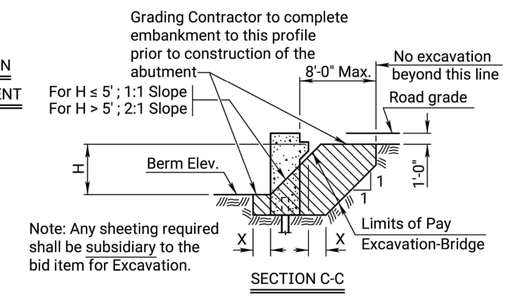

Note: Any sheeting required shall be subsidiary to the bid item for Excavation.

EXCAVATION DETAILS FOR TYPICAL ABUTMENTS

See detail when rock or shale (rock) is encountered. ⊛

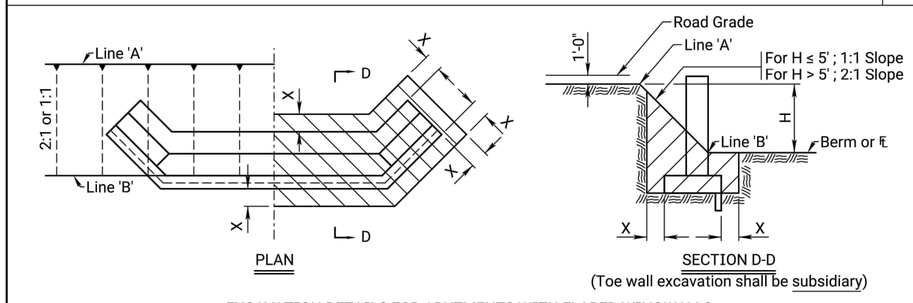

EXCAVATION DETAILS FOR ABUTMENTS WITH FLARED WINGWALLS

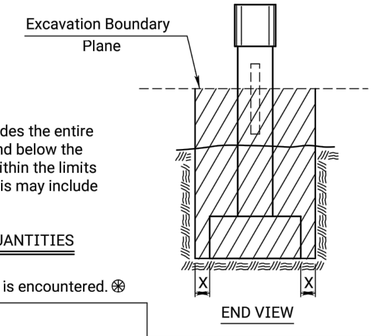

Note: Class II Excavation includes the entire volume of whatever nature found below the "Excavation Boundary Plane", within the limits specified for measurement. This may include water or air.

CLASS II EXCAVATION QUANTITIES

See detail when rock or shale (rock) is encountered. ⊛

Note: All bridge excavation shall be computed on the basis of the cross-hatch areas and boundary lines indicated on this sheet and the Excavation Boundary Plane on the Construction Layout.

Sides of trenches in hard or compacted soil including embankments shall be shored, sheeted, braced or otherwise supported when the trench is more than 5 feet in depth and 8 feet or more in length. In lieu of the shoring, the sides of the trench above the 5 foot level may be sloped to preclude collapse. The slope for average soils shall be 1:1. If the angle of repose of the soil is less, flatter slopes shall be required.

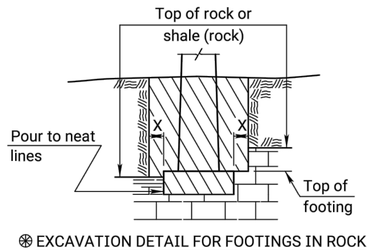

⊛ EXCAVATION DETAIL FOR FOOTINGS IN ROCK OR SHALE (ROCK)

(Piers and Abutments)

Note: Excavation below top of rock, hard shale or below top of footing, whichever is lower, shall be to neat lines of the concrete construction.

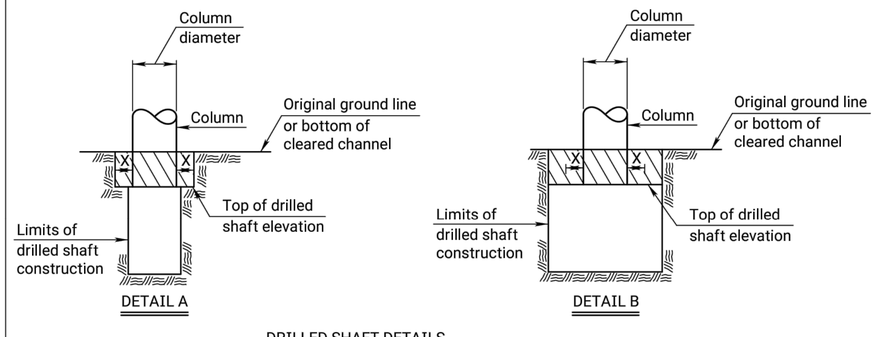

DRILLED SHAFT DETAILS

Note: Whenever the limits of the drilled shaft construction are greater than the Column Diameter + 2X, the limits of Class I, II or III Excavation shall be the limits of the drilled shaft construction. (See Detail B)

Dimension "X" shall be 2'-0" unless indicated otherwise on the general plans.

Dimension "Y" shall be 1'-6" unless indicated otherwise on the general plans.

NO.	DATE	REVISIONS	BY	APP'D
06	08-15-12	Embedment Excavation Subsidiary	J.P.J.	T.L.F.
05	05-15-12	Revised Wing Excavation	J.P.J.	T.L.F.
04	03-03-10	Revised Wing Excavation	J.P.J.	T.L.F.

KANSAS DEPARTMENT OF TRANSPORTATION

BRIDGE EXCAVATION (LRFD)

BR100B

FHWA APPROVAL		04-17-10	APP'D.	Terry L. Fleck
DESIGNED	DETAILED	R.D.R.	QUANTITIES	TRACED
DESIGN CK.	DETAIL CK.	L.R.R.	QUAN.CK.	TRACE CK.

KDOT Graphics Certified 06-20-2022

Sh. No. 48

KDOT Graphics Certified

Plotted by : KDOT#CADD.Support_ks.gov 25-JUN-2022 00:03
J:\Projects\2023\230101431_COW_WDC Bridge Replacement at 15th Street\00 230431 CAD\SHTS\05 Civil\Pav\230431_BR100B.dwg