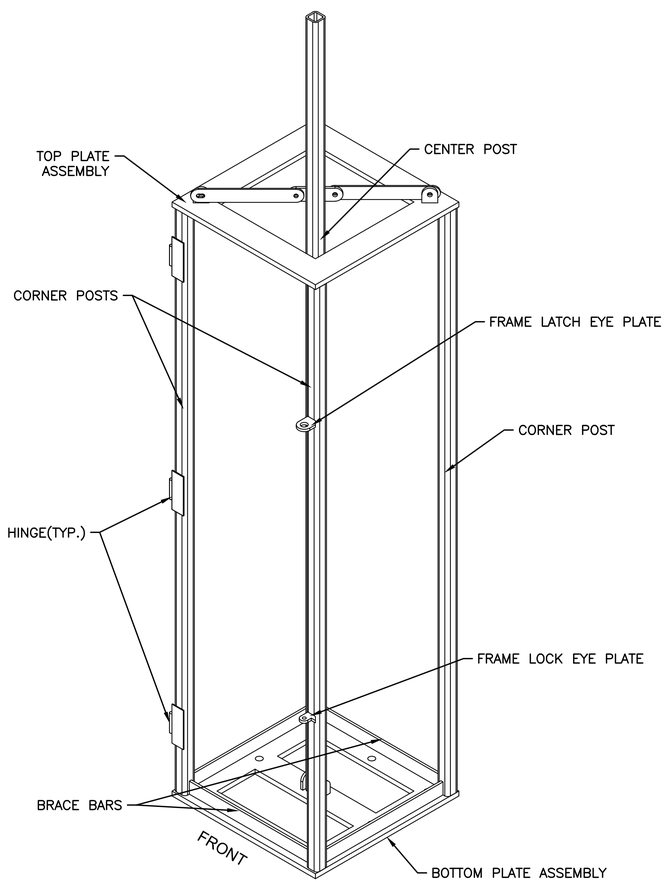

ISOMETRIC FRAME VIEW
N.T.S.

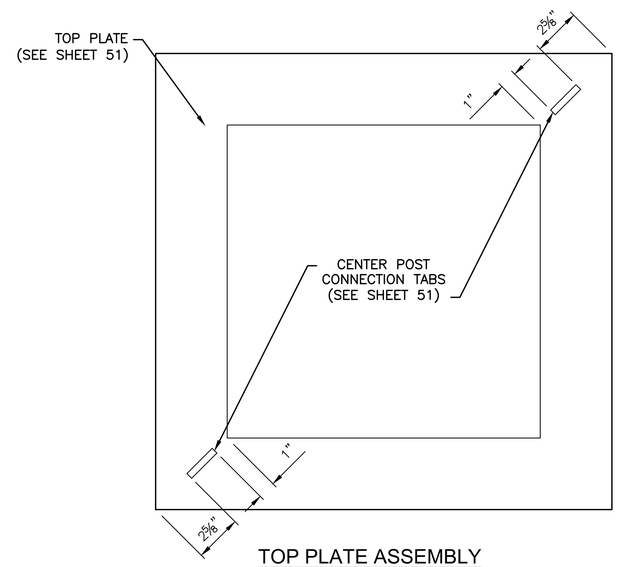

TOP PLATE ASSEMBLY
SCALE: 3"=1'-0" (FULL SIZE)

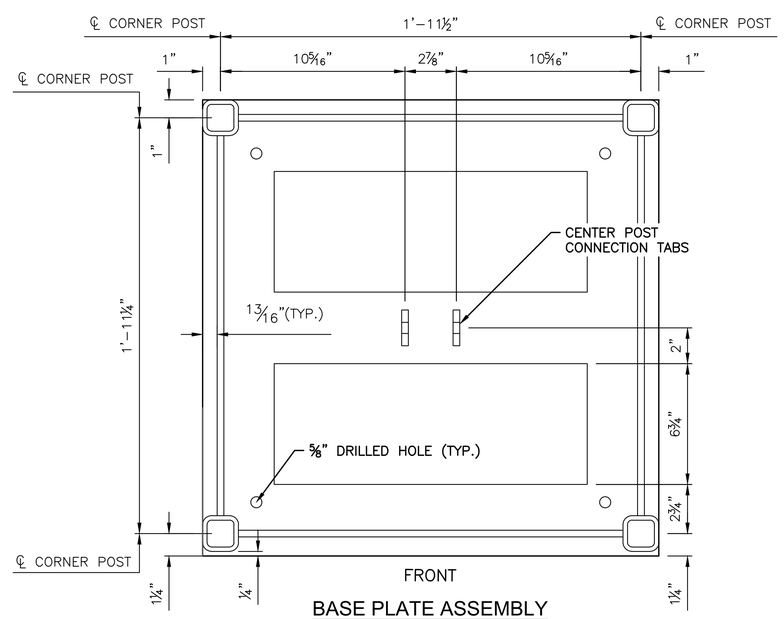

BASE PLATE ASSEMBLY
TOP VIEW
SCALE: 3"=1'-0" (FULL SIZE)

FRAME POST DETAILS			
PART NAME	UNIT WEIGHT (LBS)	QUANTITY	TOTAL WEIGHT (LBS)
CORNER POST	40.5	32	1296
CENTER POST ABUTMENT	48.7	4	194.8
CENTER POST PIER	53.7	4	214.6
TOTAL			1705

*ALL QUANTITIES SHOWN ARE SUBSIDIARY TO "LIGHT TOWERS"

NOTES:

SEE SHEET 49 FOR SUMMARY OF QUANTITIES AND NOTES

SEE SHEET 51 FOR PLATE AND PART DIMENSIONS

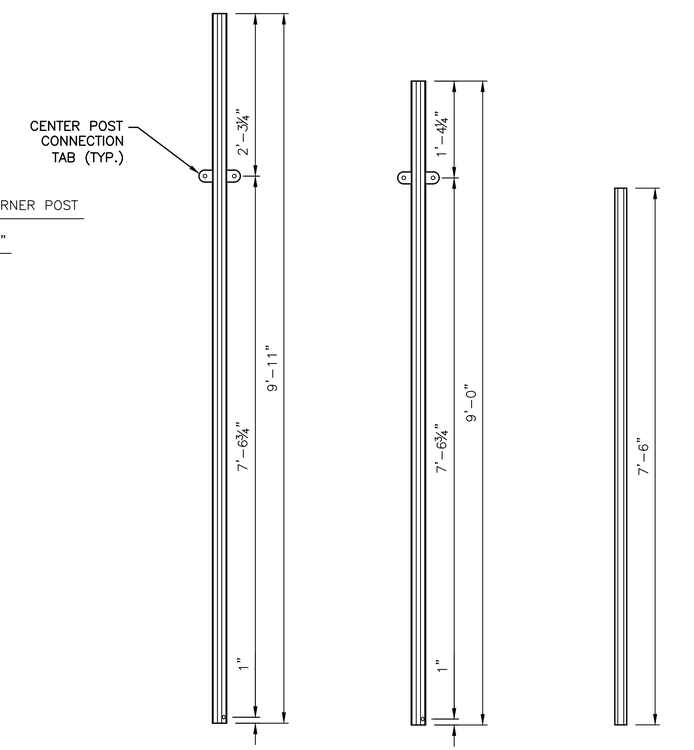

POST DETAILS
(ALL POSTS SHALL BE HSS 2x2x¼")
SCALE: 1"=1'-0" (FULL SIZE)

MKEC
Wichita, KS • 316.684.9600

IMPROVEMENT PLANS FOR
15TH STREET BRIDGE OVER THE WICHITA DRAINAGE CANAL
WICHITA, KS

FRAME ASSEMBLY DETAILS

PROJECT NO. 472-2023-085864

SCALE

DRAWN	DESIGNED	CHECKED
LWG	DMU	JRA

NO.	REVISION	DATE
0	ISSUED FOR CONSTRUCTION	8-1-2025

SHEET NO.
50 OF 114

©2025 MKEC ENGINEERING, INC. ALL RIGHTS RESERVED WWW.MKEC.COM. THESE DRAWINGS AND THEIR CONTENTS, INCLUDING, BUT NOT LIMITED TO, ALL CONCEPTS, DESIGNS, & IDEAS ARE THE EXCLUSIVE PROPERTY OF MKEC ENGINEERING, INC. (MKEC), AND MAY NOT BE USED OR REPRODUCED IN ANY WAY WITHOUT THE EXPRESS CONSENT OF MKEC.

J:\PROJECTS\2023\2010\0431_COV_WDC BRIDGE REPLACEMENT AT 15TH STREET\00 230431 CAD\SHTS\05 CIVIL\BRIDGE\230431_LIGHT TOWER DETAILS.DWG
PLOTTED: Friday, August 01, 2025 @ 02:20PM