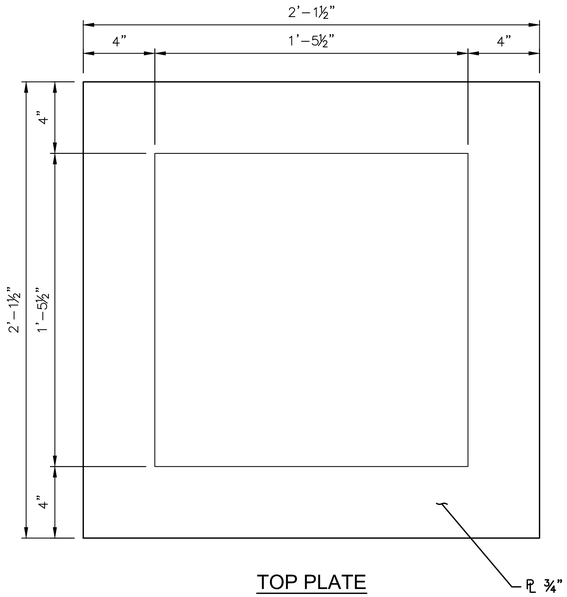

TOP PLATE
(8 PLATES REQUIRED)
SCALE: 3"=1'–0" (FULL SIZE)

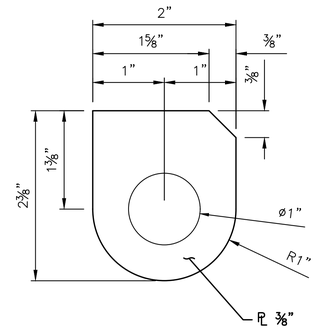

FRAME LATCH EYE PLATE
(8 PLATES REQUIRED)
SCALE: 1'–0"=1'–0" (FULL SIZE)

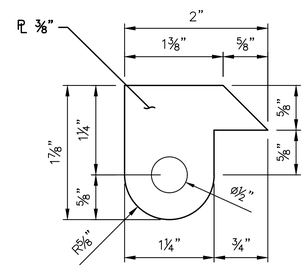

FRAME LOCK EYE PLATE
(8 PLATES REQUIRED)
SCALE: 1'–0"=1'–0" (FULL SIZE)

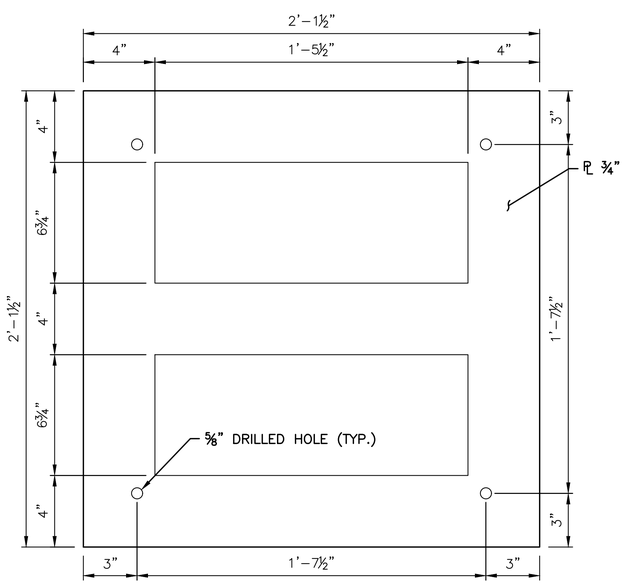

BOTTOM PLATE
(8 PLATES REQUIRED)
SCALE: 3"=1'–0" (FULL SIZE)

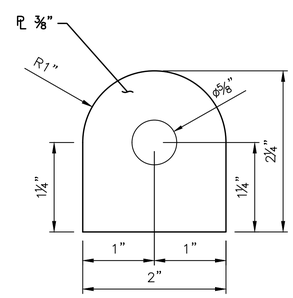

CENTER POST CONNECTION TABS
(48 PLATES REQUIRED)
SCALE: 1'–0"=1'–0" (FULL SIZE)

FRAME PARTS			
PART NAME	UNIT WEIGHT (LBS)	QUANTITY	TOTAL WEIGHT (LBS)
TOP PLATE	73	8	584
BOTTOM PLATE	88	8	704
BRACE BARS FRONT & BACK	4.6	16	73.1
BRACE BAR SIDES	4.5	16	72.3
FRAME LATCH EYE PLATE	0.4	8	3.3
FRAME LOCK EYE PLATE	0.2	8	1.9
CENTER POST CONNECTION TABS	0.4	48	19.7
CENTER POST CONNECTION PLATE	1.9	16	30.4
TOTAL			1489

*ALL QUANTITIES SHOWN ARE SUBSIDIARY TO "LIGHT TOWERS"

NOTE:

SEE SHEET 49 FOR SUMMARY OF QUANTITIES AND NOTES

CENTER POST CONNECTION HARDWARE LIST	
PART NAME	QUANTITY
1/2" x 2" HEX BOLTS	32
1/2" STD. WASHERS	64
1/2" LOCK NUTS	32

NOTE:

HEX BOLTS PER ASTM A3307, STANDARD WASHERS PER ASTM F844, AND LOCK NUTS PER ASTM A563. ALL HARDWARE SHALL BE HOT–DIP GALVANIZED PER ASTM F2329.

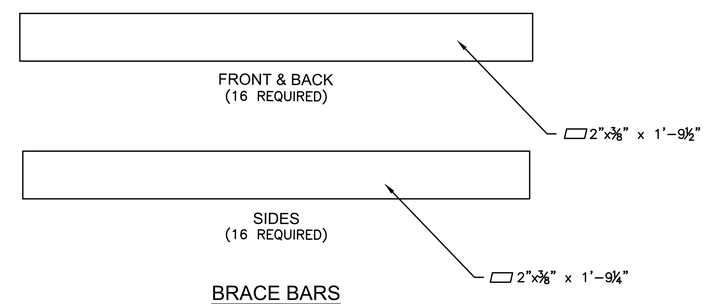

BRACE BARS
SCALE: 4"=1'–0" (FULL SIZE)

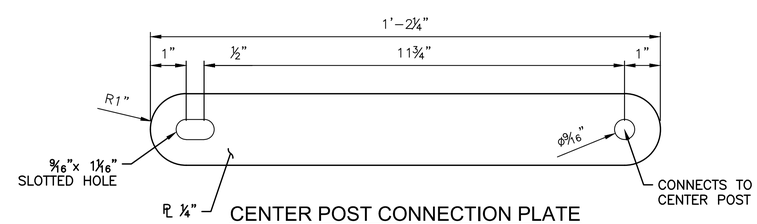

CENTER POST CONNECTION PLATE
(16 PLATES REQUIRED)
SCALE: 6"=1'–0" (FULL SIZE)

MKEC
Wichita, KS • 316.684.9600

IMPROVEMENT PLANS FOR
15TH STREET BRIDGE OVER THE WICHITA DRAINAGE CANAL
WICHITA, KS

FRAME PARTS DETAILS

PROJECT NO. 472-2023-085864
SCALE

DRAWN	DESIGNED	CHECKED
LWG	DMU	JRA

NO.	REVISION	DATE
0	ISSUED FOR CONSTRUCTION	8-1-2025

SHEET NO.
51 OF 114

©2025 MKEC ENGINEERING, INC. ALL RIGHTS RESERVED WWW.MKEC.COM. THESE DRAWINGS AND THEIR CONTENTS, INCLUDING, BUT NOT LIMITED TO, ALL CONCEPTS, DESIGNS, & IDEAS ARE THE EXCLUSIVE PROPERTY OF MKEC ENGINEERING, INC. (MKEC), AND MAY NOT BE USED OR REPRODUCED IN ANY WAY WITHOUT THE EXPRESS CONSENT OF MKEC.

J:\PROJECTS\2023\2010431_COW_WDC BRIDGE REPLACEMENT AT 15TH STREET\00 230431 CAD\SHTS\05 CIVIL\BRIDGE\230431_LIGHT TOWER DETAILS.DWG
PLOTTED: Friday, August 01, 2025 @ 02:29PM