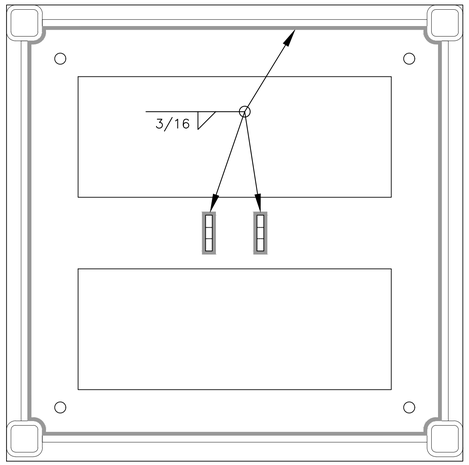

TOP VIEW

BASE PLATE WELDS
SCALE: 3"–1'–0" (FULL VIEW)

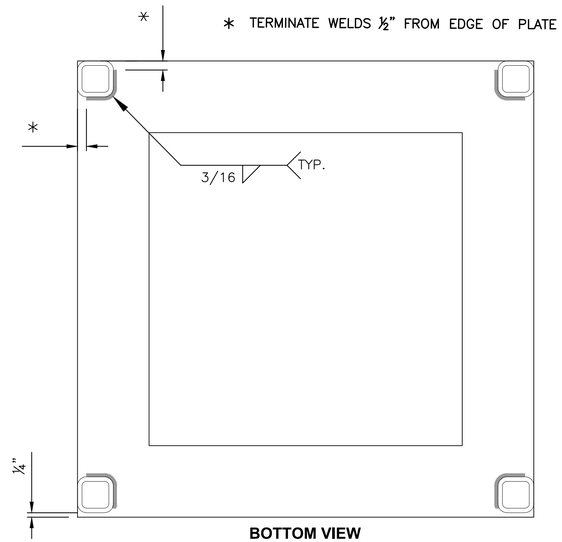

BOTTOM VIEW

TOP PLATE WELDS
SCALE: 3"–1'–0" (FULL VIEW)

NOTE:
SEE SHEET 50 FOR PART NAMES AND LOCATIONS

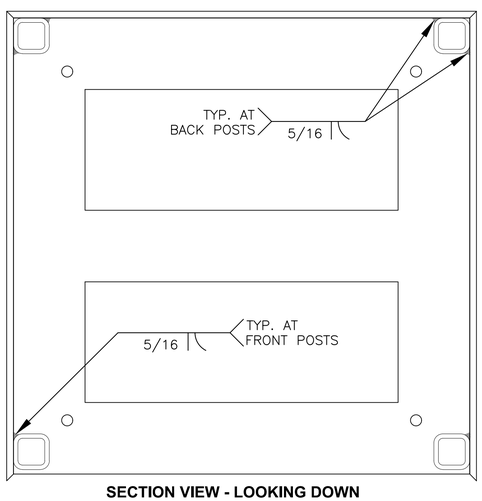

SECTION VIEW - LOOKING DOWN

SKIN PLATE TO FRAME WELDS
SCALE: 3"–1'–0" (FULL VIEW)

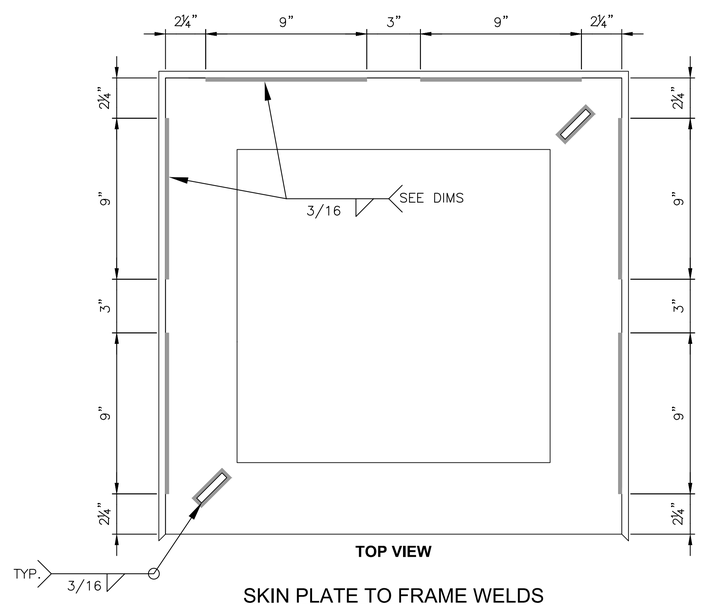

TOP VIEW

SKIN PLATE TO FRAME WELDS
SCALE: 3"–1'–0" (FULL VIEW)

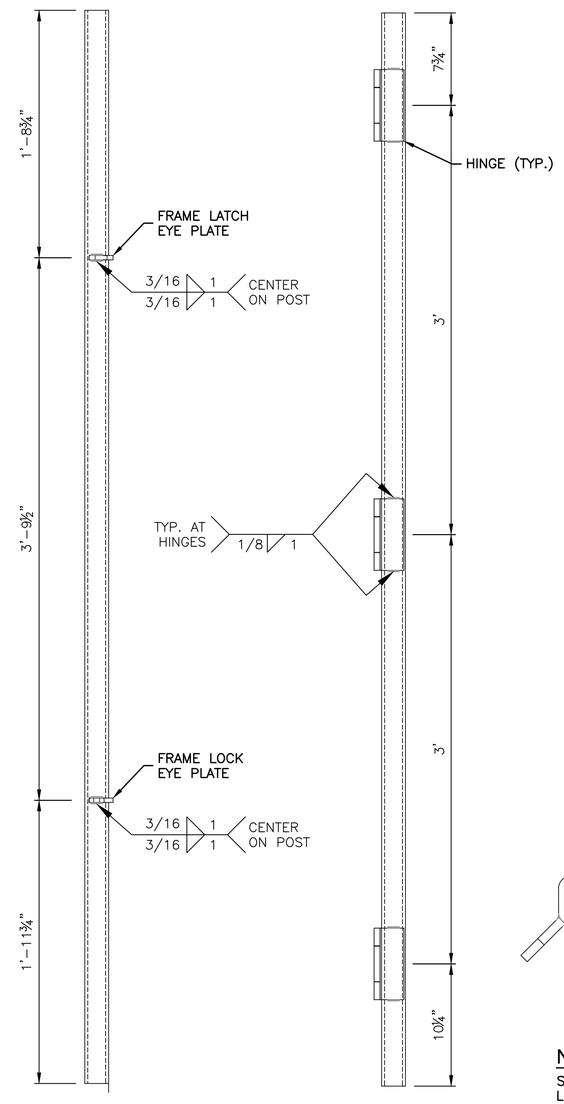

ELEVATION VIEW
FRONT RIGHT POST WELDS
SCALE: 2"=1'–0" (FULL VIEW)

ELEVATION VIEW
FRONT LEFT POST WELDS
SCALE: 2"=1'–0" (FULL VIEW)

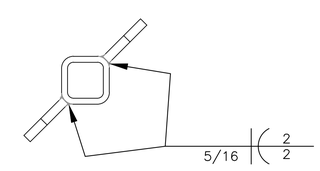

NOTE:
SEE SHEET 50 FOR VERTICAL LOCATION OF CONNECTION TABS FOR EACH CENTER POST TYPE.

CENTER POST WELDS
SCALE: 4"=1'–0" (FULL VIEW)

MKEC
Wichita, KS • 316.684.9600

IMPROVEMENT PLANS FOR
15TH STREET BRIDGE OVER THE WICHITA DRAINAGE CANAL
WICHITA, KS

FRAME WELDING DETAILS

PROJECT NO. 472-2023-085864
SCALE

DRAWN	DESIGNED	CHECKED
LWG	DMU	JRA

NO.	REVISION	DATE
0	ISSUED FOR CONSTRUCTION	8-1-2025

SHEET NO.
52 OF 114

©2025 MKEC ENGINEERING, INC. ALL RIGHTS RESERVED WWW.MKEC.COM. THESE DRAWINGS AND THEIR CONTENTS, INCLUDING, BUT NOT LIMITED TO, ALL CONCEPTS, DESIGNS, & IDEAS ARE THE EXCLUSIVE PROPERTY OF MKEC ENGINEERING, INC. (MKEC), AND MAY NOT BE USED OR REPRODUCED IN ANY WAY WITHOUT THE EXPRESS CONSENT OF MKEC.

J:\PROJECTS\2023\2010\10431_COW_WDC BRIDGE REPLACEMENT AT 15TH STREET\00 230431 CAD\SHTS\05 CIVIL\BRIDGE\230431_LIGHT TOWER DETAILS.DWG
PLOTTED: Friday, August 01, 2025 @ 02:29PM