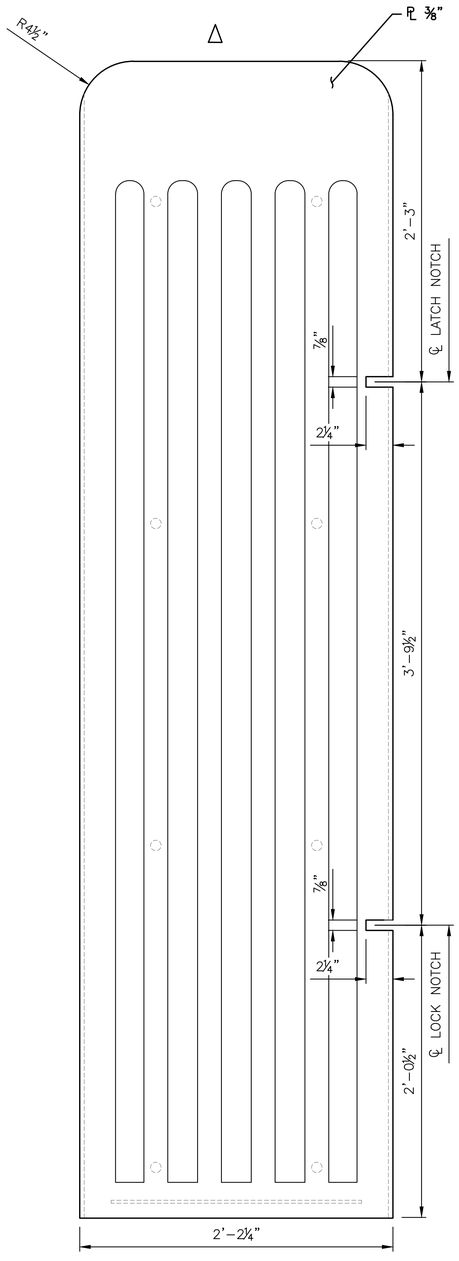

FRONT SKIN PLATE

FACE VIEW

SCALE: 2"=1'-0" (FULL SIZE)

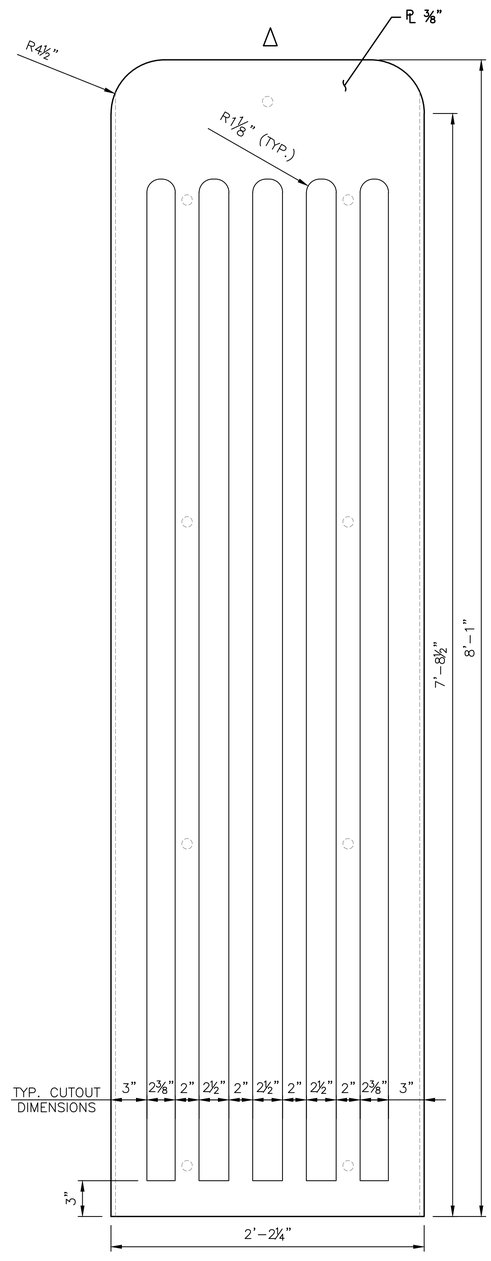

BACK & RIGHT SKIN PLATE

FACE VIEW

SCALE: 2"=1'-0" (FULL SIZE)

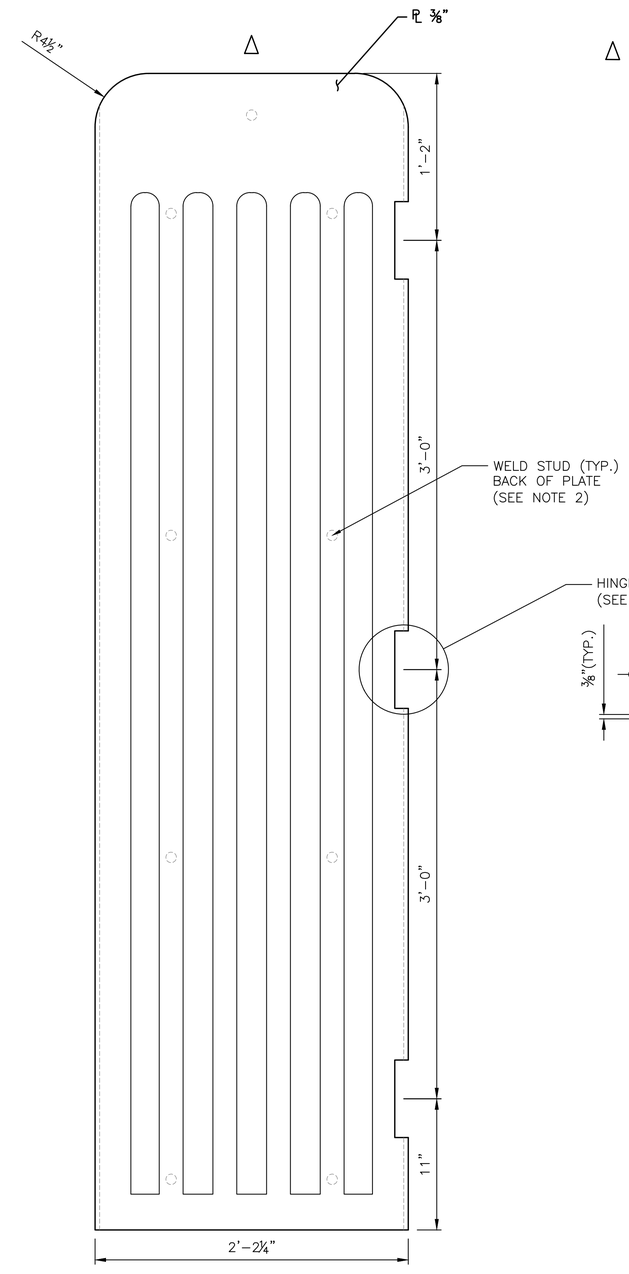

LEFT SKIN PLATE

FACE VIEW

SCALE: 2"=1'-0" (FULL SIZE)

△ TOPS OF SKIN PLATES NOT SHOWN FOR CLARITY (SEE SHEET 53 FOR TOP SHAPES FOR EACH TOWER TYPE)

NOTES

1. HINGE CUTOUT TO BE SIZED BY THE FABRICATOR TO ALLOW FOR ADEQUATE CLEAR SPACE FOR THE FULL RANGE OF HINGE OPERATION AND MAINTENANCE.
2. TYPICAL WELD STUD LOCATIONS AND INSTALLATION, AS SHOWN ON SHEET 55, APPLY TO ALL SKIN PLATES. CAP WELD STUD LOCATION SHOWN ON THIS SHEET APPLIES ONLY TO SIDE AND BACK SKIN PLATES.

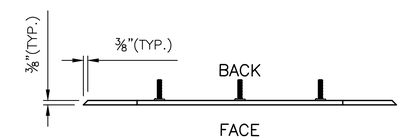

TOP EDGE VIEW

SCALE: 2"=1'-0" (FULL SIZE)

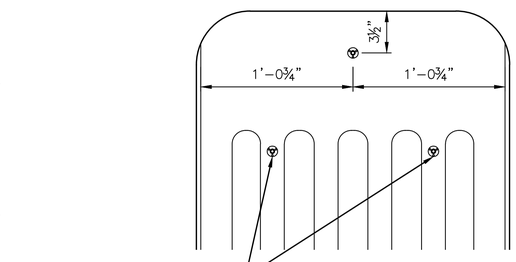

CAP WELD STUD

BACK VIEW

(SIDE AND BACK SKIN PLATES ONLY)

SCALE: 2"=1'-0" (FULL SIZE)

MKEC

Wichita, KS • 316.684.9600

IMPROVEMENT PLANS FOR

15TH STREET BRIDGE OVER THE WICHITA DRAINAGE CANAL

WICHITA, KS

SKIN PLATE DETAILS

PROJECT NO. 472-2023-085864

SCALE

DRAWN	DESIGNED	CHECKED
LWG	DMU	JRA

NO.	REVISION	DATE
0	ISSUED FOR CONSTRUCTION	8-1-2025

SHEET NO. 54 OF 114

©2025 MKEC ENGINEERING, INC. ALL RIGHTS RESERVED WWW.MKEC.COM THESE DRAWINGS AND THEIR CONTENTS, INCLUDING BUT NOT LIMITED TO ALL CONCEPTS, DESIGNS & IDEAS ARE THE EXCLUSIVE PROPERTY OF MKEC ENGINEERING, INC. (MKEC), AND MAY NOT BE USED OR REPRODUCED IN ANY WAY WITHOUT THE EXPRESS CONSENT OF MKEC.

J:\PROJECTS\2023\2310110431_COW_VIDC BRIDGE REPLACEMENT AT 15TH STREET\0 29431 CAD\SHTS\05 CIVIL\BRIDGE\29431_LIGHT TOWER DETAILS.DWG
PLOTTED: Friday, August 01, 2025 @ 03:26PM