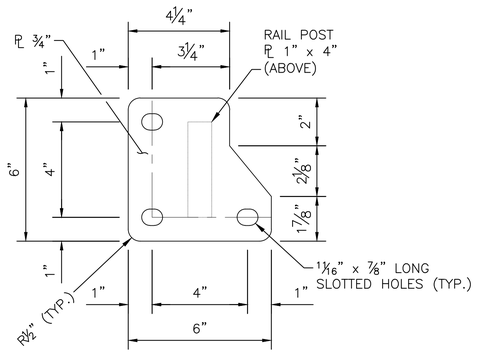

SINGLE LAYOUT
LEFT ORIENTATION (L.O.)

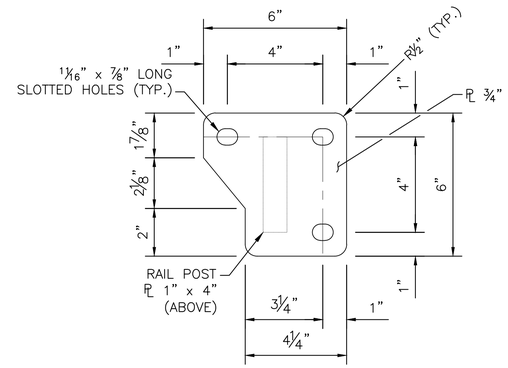

SINGLE LAYOUT
RIGHT ORIENTATION (R.O.)

BASE PLATES			
TYPE	UNIT WEIGHT (LBS)	QUANTITY	TOTAL WEIGHT (LBS)
3–BOLT	7.2	20	143.7
4–BOLT	6.3	72	454.6
TOTAL			598

NOTE: ALL QUANTITIES SHOWN ARE SUBSIDIARY TO "COMBINATION RAIL". SEE SHEET 59 FOR SUMMARY.

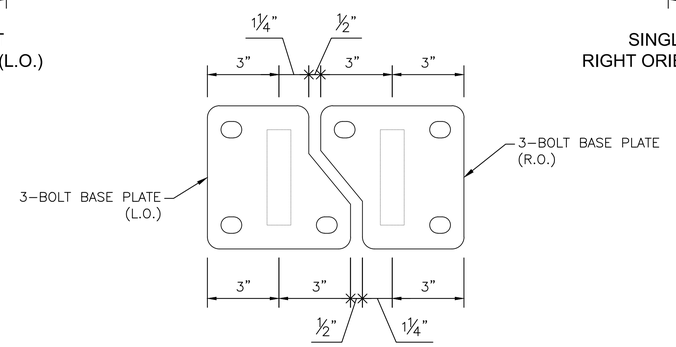

PAIRED LAYOUT

3-BOLT BASE PLATE

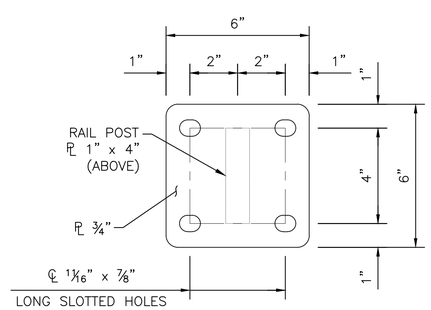

4-BOLT BASE PLATE

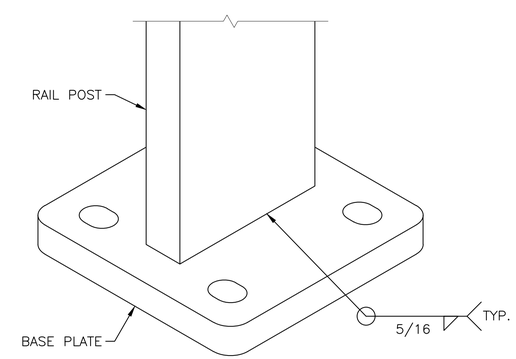

ISOMETRIC VIEW
(TYPICAL FOR ALL 3–BOLT & 4–BOLT BASE PLATES)

BASE PLATE TO RAIL POST WELD (TYPICAL)

MKEC
Wichita, KS • 316.684.9600

IMPROVEMENT PLANS FOR
15TH STREET BRIDGE OVER THE WICHITA DRAINAGE CANAL
WICHITA, KS

COMBINATION RAIL
BASE PLATE DETAILS

PROJECT NO. 472-2023-085864
SCALE NTS

DRAWN	DESIGNED	CHECKED
RAM	DMU	JRA

NO.	REVISION	DATE
0	ISSUED FOR CONSTRUCTION	8-1-2025

SHEET NO.
62 OF 114

©2025 MKEC ENGINEERING, INC. ALL RIGHTS RESERVED WWW.MKEC.COM. THESE DRAWINGS AND THEIR CONTENTS, INCLUDING, BUT NOT LIMITED TO, ALL CONCEPTS, DESIGNS, & IDEAS ARE THE EXCLUSIVE PROPERTY OF MKEC ENGINEERING, INC. (MKEC), AND MAY NOT BE USED OR REPRODUCED IN ANY WAY WITHOUT THE EXPRESS CONSENT OF MKEC.

J:\PROJECTS\2023\2010\10431_COV_WDC BRIDGE REPLACEMENT AT 15TH STREET\00 230431 CAD\SHTS\05 CIVIL\BRIDGE\BRIDGE RAIL\230431_RAIL POST DETAILS.DWG

PLOTTED: Friday, August 01, 2025 @ 03:29PM