Sanitary Sewer System Reconstruction

along

Yale Boulevard, from 14th St. N to 15th St. N

City of Wichita, Kansas

Index Code: 623124
GBA Project No. 7218.00
City of Wichita, Kansas
Michael E. Lindebak, City Engineer
April, 1995

1. All elevations shown are City of Wichita datum.

2. Contractor will be required to provide a minimum advance notice of forty-eight (48) hours to utility companies prior to starting any excavation as follows:

Kansas One-Call	687-2470

The Contractor must notify the following in case of an emergency:

Cablevision	262-4270
KG&E-Gas	263-7511
KG&E-Electric	264-1141
Arkla Gas Company	942-8350
Southwestern Bell Telephone Co.	1-571-2611
City of Wichita Water Department	268-4908
City of Wichita Sewer Maintenance	733-0202

3. The Contractor shall be responsible for maintaining continuous flow of sewage through construction. Contractor's proposed method for maintaining sewage flow shall be approved by the Engineer. Cost of maintaining flow of sewage through construction will not be paid for directly and this cost shall be considered as subsidary to the other pay items of the work.

4. Contractor shall vacuum test all manholes according to the City of Wichita standard specifications.

5. The tops of all manholes to be set 0.4 feet above existing ground unless otherwise noted.

6. Contractor shall not start work on the project until the project inspector is assigned to the project and is present on the site. Any work done without inspection will be required to be uncovered for inspection.

7. The contractor shall give all property owners and/or tenants of developed property directly abutting the construction of this project a minimum of ten (10) days advance notice prior to start of construction.

8. The contractor shall be responsible for preserving property irons. The contractor shall be required to re-establish any property irons which are damaged or destroyed by his construction operations. Such irons shall be re-established by a licensed land surveyor in accordance with state laws. All costs for this work shall be subsidiary to site restoration.

9. The contractor shall restore all ditches, swales, road shoulders, entrances, and bank lines to their original slopes and grades except as shown otherwise.

10. No services will be installed as part of this project.

11. Interurban traffic generated outside the project area and local business or residential traffic generated within the project area are to be carried through construction as further promulgated by project special provisions.

12. Rubble from the removal of miscellaneous structures including any tree trimmings shall be disposed of on sites provided by the contractor. These sites shall also be approved of by the engineer as to suitability, appearance, and site location. Locations that, in the opinion of the engineer, leave an unsightly appearance will not be approved. All disposal sites must be approved by the Kansas Department of Health and Environment. Material either stockpiled or disposed of in a flood plain will require a Kansas State Board of Agriculture Permit. Any material dumped in waters of the United States or Wetlands is subject to US Corps of Engineers Permitting Regulations. Any material buried or stockpiled beyond approved construction limits may require Archaeological Investigations unless buried in a previously approved disposal location.

13. All lawn/turf areas disturbed by construction of the proposed improvements shall be restored with the same grass/sod as existing. Restoration of disturbed ares shall include, but not be limited to, top soil preparation, seeding, mulch, and/or reseeding. All seeding/sodding work shall be in accordance with the City of Wichita Standard Specifications and the City of Wichita Administrative Regulation No. AR78 which governs cleanup and restoration or replacement following construction. All costs for this work shall be subsidiary to the lump sum price bid for "Site Restoration".

INDEX OF SHEETS:

Sheet No. 1	Title Sheet
Sheet No. 2	Plan/Profile
Sheet No. 3-5	Manhole details

S. E. Anderson PE/LS
Consulting Engineer
Whitewater, Kansas

STEVEN E. ANDERSON
April 20, 1995

AS BUILTS
5/17/95

Sanitary Sewer Reconstruction
Yale Blvd., 14th St. N.
to 15th St. N.
Index No. 623124

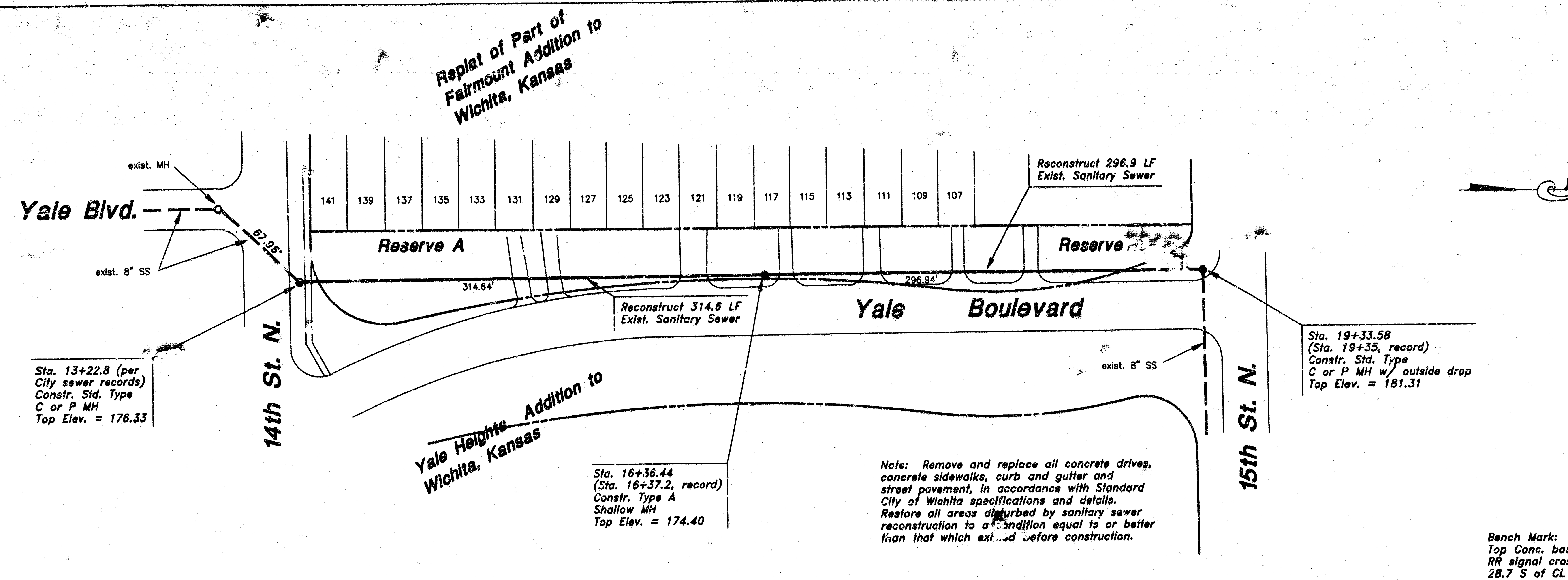
Replat of Part of
Fairmount Addition to
Wichita, Kansas
exist. MH
Yale Blvd.
exist. 8" SS
67.95'
141
139
137
135
133
131
129
127
125
123
121
119
117
115
113
111
109
107
Reserve A
Reserve
314.64'
296.94'
Reconstruct 296.9 LF
Exist. Sanitary Sewer
Reconstruct 314.6 LF
Exist. Sanitary Sewer
Yale Boulevard
14th St. N.
15th St. N.
exist. 8" SS
Yale Heights Addition to
Wichita, Kansas
Sta. 13+22.8 (per
City sewer records)
Constr. Std. Type
C or P MH
Top Elev. = 176.33
Sta. 16+36.44
(Sta. 16+37.2, record)
Constr. Type A
Shallow MH
Top Elev. = 174.40
Sta. 19+33.58
(Sta. 19+35, record)
Constr. Std. Type
C or P MH w/ outside drop
Top Elev. = 181.31
1"=40'

Note: Remove and replace all concrete drives, concrete sidewalks, curb and gutter and street pavement, in accordance with Standard City of Wichita specifications and details. Restore all areas disturbed by sanitary sewer reconstruction to a condition equal to or better than that which existed before construction.

Bench Mark:
Top Conc. base,
RR signal crossing sign
28.7 S of CL 13th St. N.
67.0' E of CL Levon
Elev. 193.29, City Datum

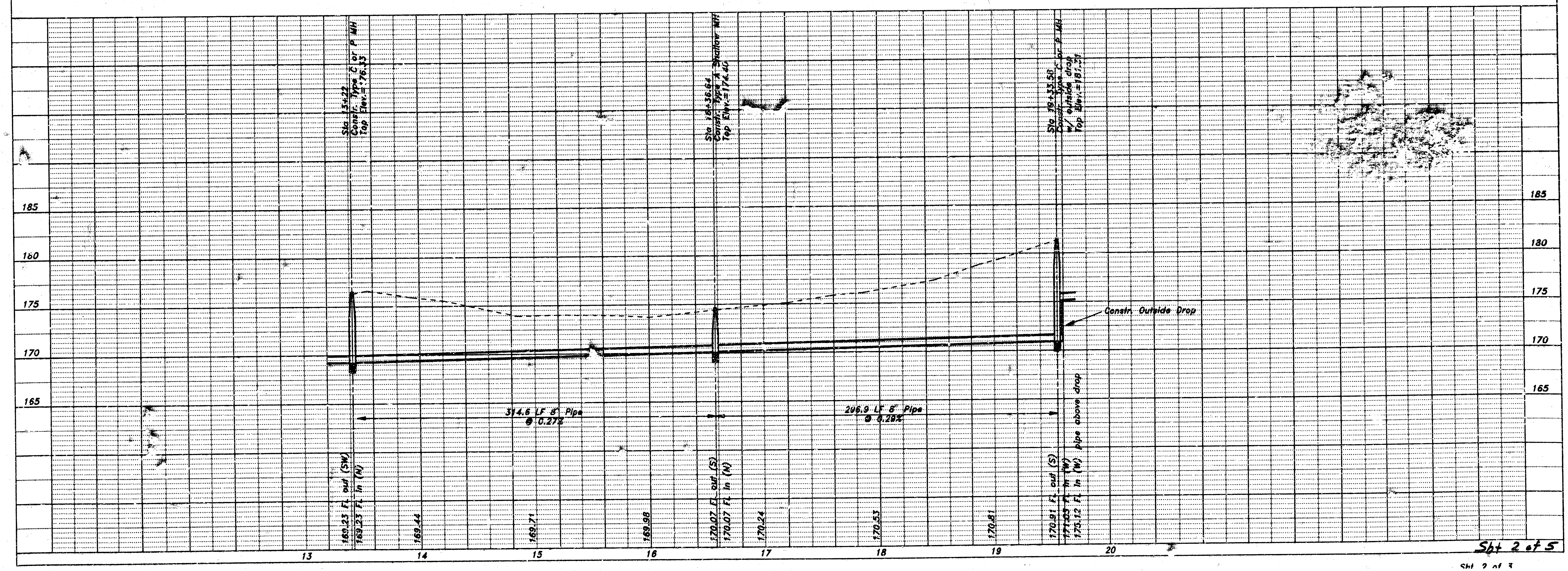
Sta 13+22
Constr. Type C or P MH
Top Elev.=176.33
Sta 16+36.64
Constr. Type A Shallow MH
Top Elev.=174.40
Sta 19+33.58
Constr. Type C or P MH
w/ outside drop
Top Elev.=181.31
185
180
175
170
165
Constr. Outside Drop
314.6 LF 8" Pipe
@ 0.27%
296.9 LF 8" Pipe
@ 0.29%
169.23 FL out (SW)
169.23 FL in (N)
169.44
169.71
169.98
170.07 FL out (S)
170.07 FL in (N)
170.24
170.53
170.81
170.91 FL out (S)
171.05 FL in (W)
175.12 FL in (W) pipe above drop
13
14
15
16
17
18
19
20

Sht 2 of 5

MANHOLE FRAME AND COVER DETAIL

ADOPTED AS STANDARD DESIGN

BY

City of Wichita, Kansas

MANHOLE COVER

Weight: 180 Lbs.

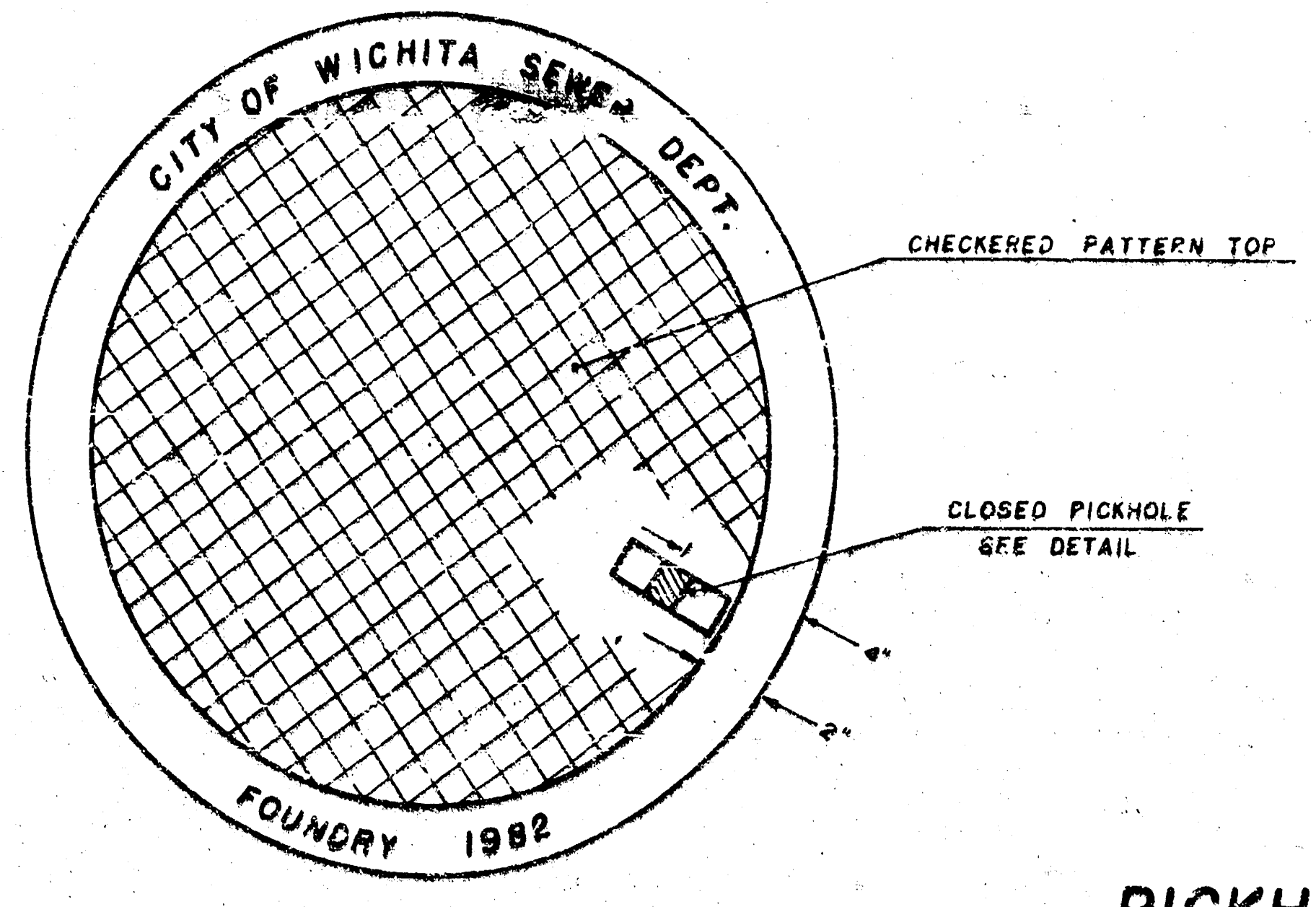
CITY OF WICHITA SEWER DEPT.
CHECKERED PATTERN TOP
CLOSED PICKHOLE SEE DETAIL
1"
2"
FOUNDRY 1982

TOP VIEW

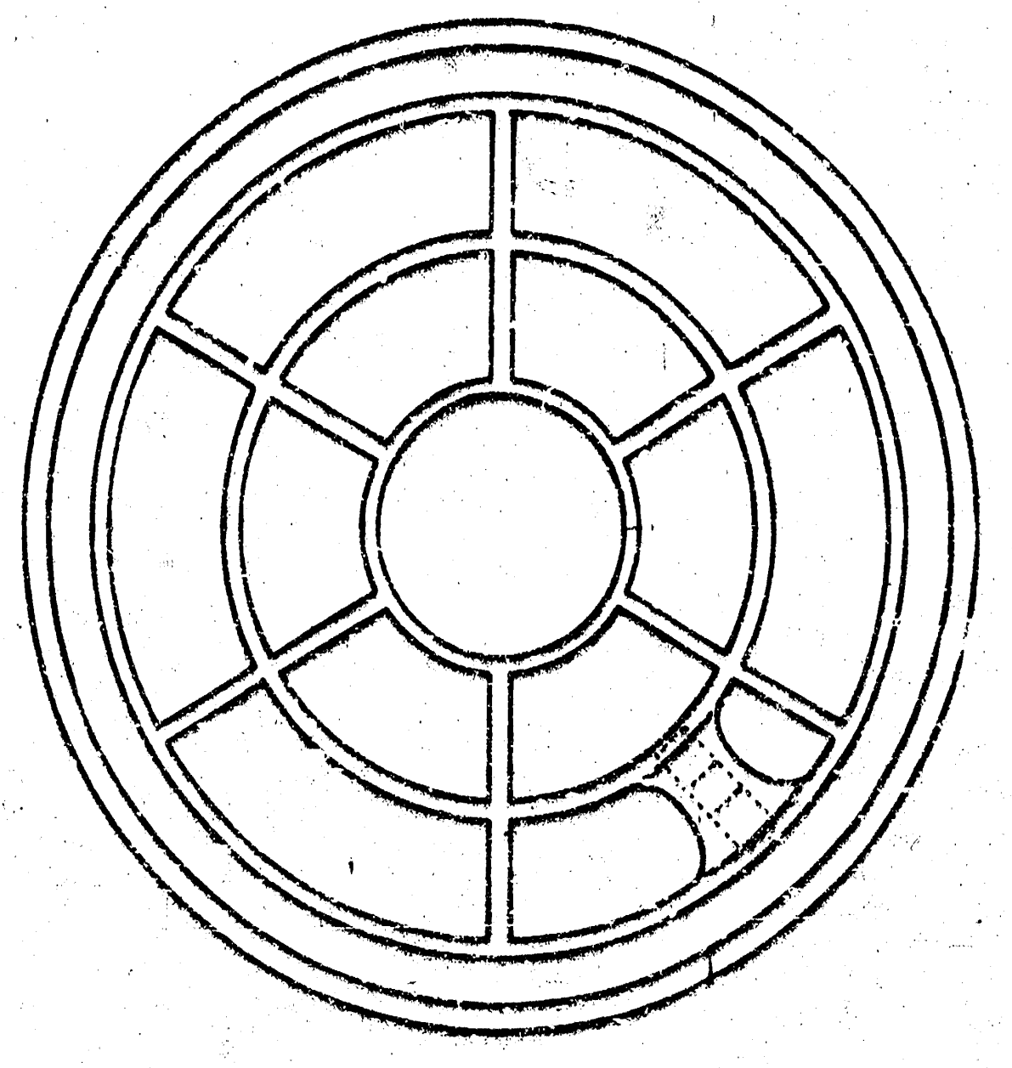

BOTTOM VIEW

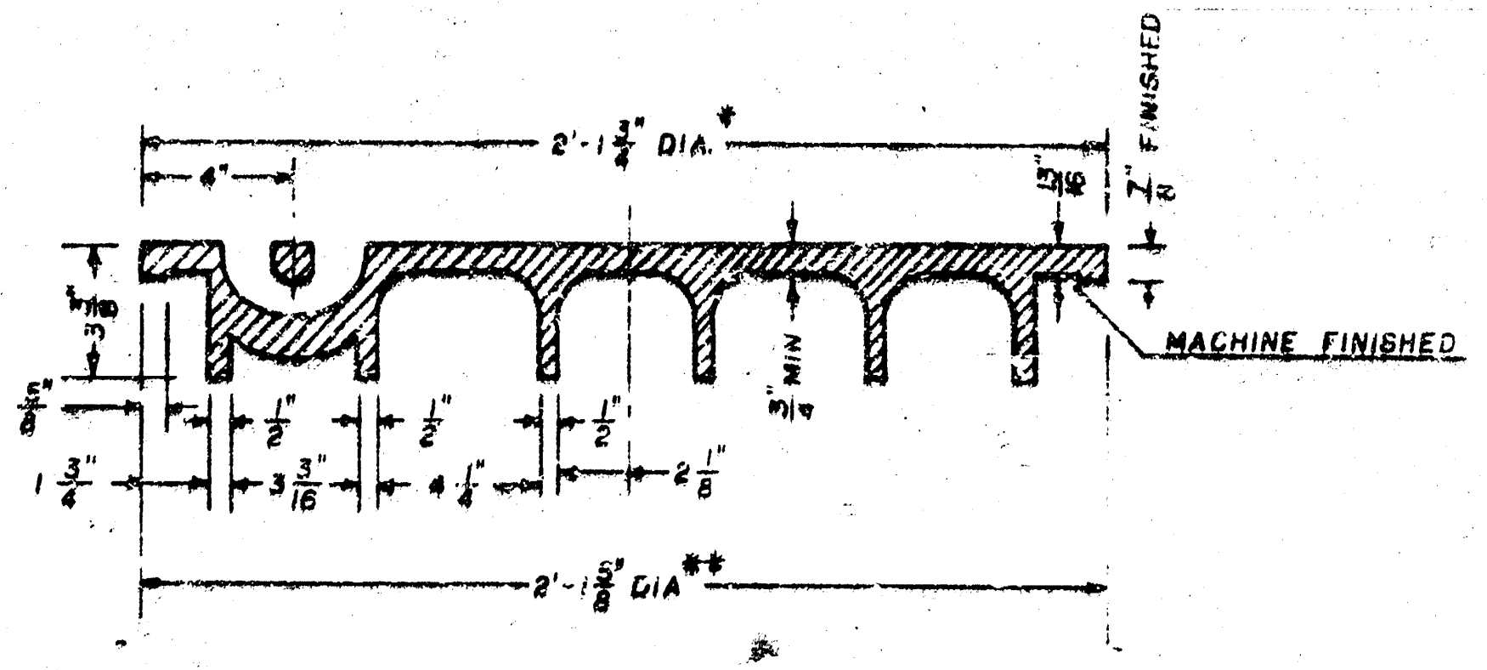
2'-1 3/4" DIA.*
4"
13/16"
7/8" FINISHED
3/4" MIN
MACHINE FINISHED
1 13/16"
5/8"
1/2"
1/2"
1/2"
1 3/4"
3 3/16"
4 1/4"
2 1/8"
2'-1 5/8" DIA**

SECTION VIEW

* OUTSIDE DIA TOP OF COVER
** OUTSIDE DIA BOTTOM OF COVER

PICKHOLE DETAIL

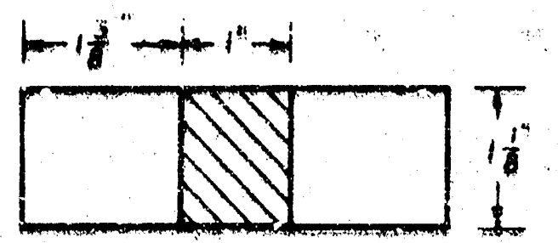
1 3/8"
1"
1 1/8"
3 3/4"

TOP VIEW

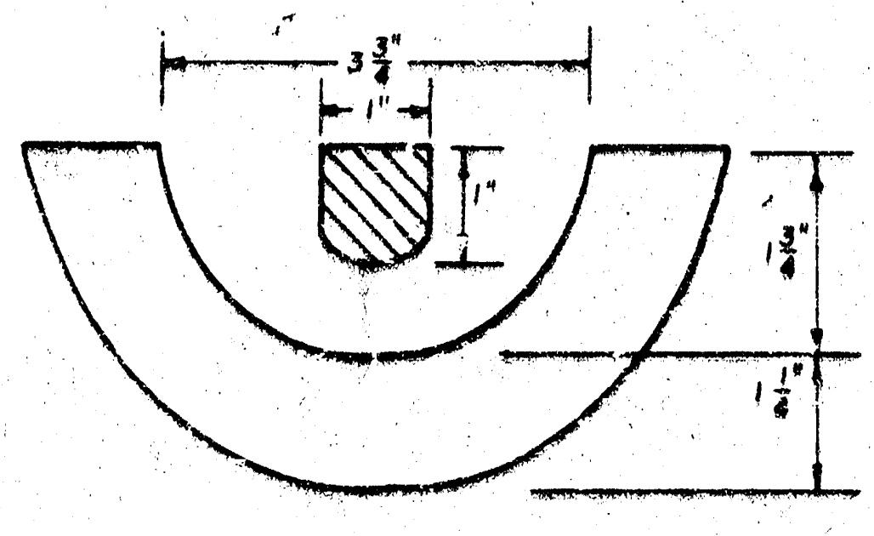
3 3/4"
1"
1"
1 3/4"
1 1/4"

SECTION VIEW

MANHOLE FRAME

Weight: 240 Lbs.

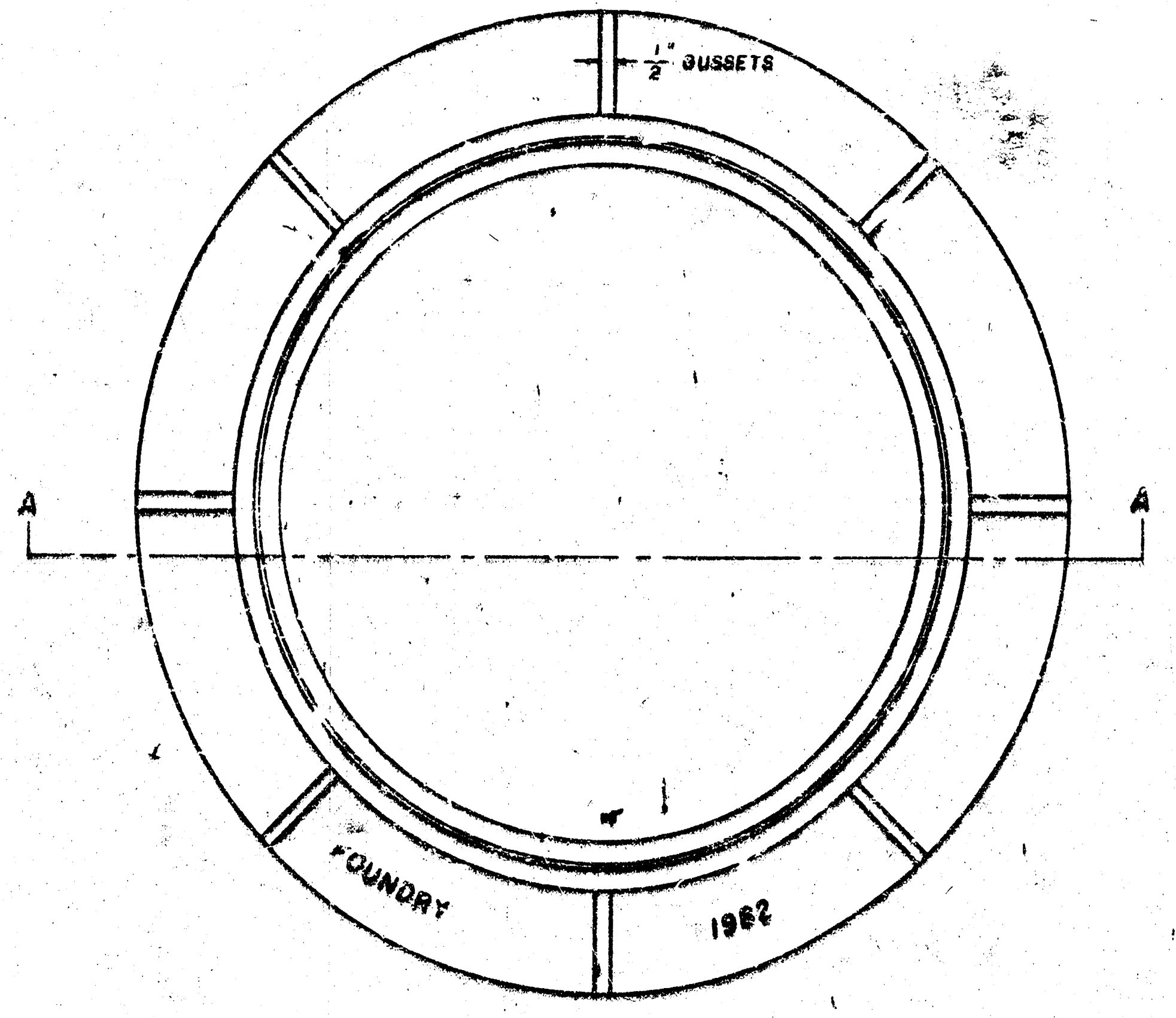
1/2" GUSSETS
A
A
FOUNDRY
1982

TOP VIEW

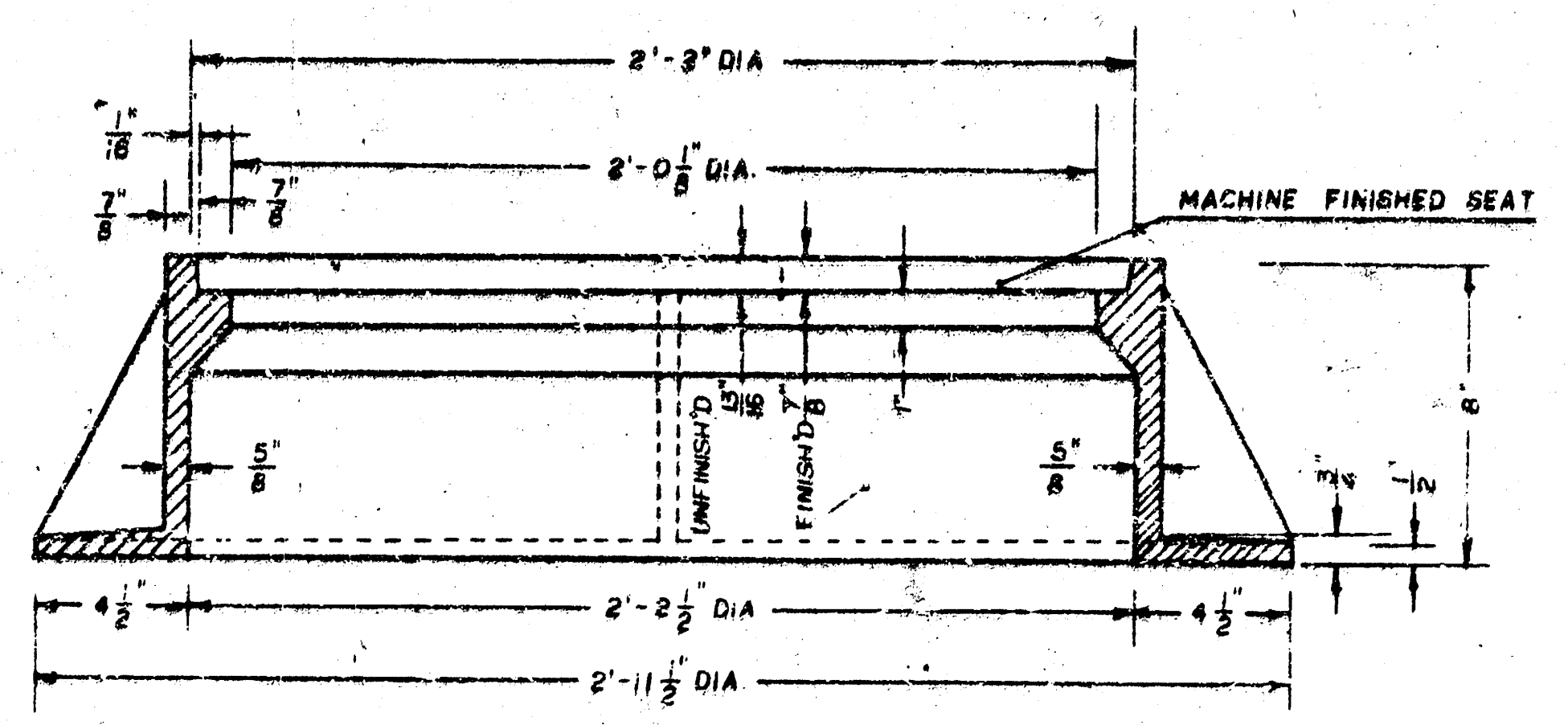
2'-3" DIA
1/16"
2'-0 1/8" DIA.
7/8"
7/8"
MACHINE FINISHED SEAT
UNFINISH'D 13/16"
FINISH'D 7/8"
1"
5/8"
5/8"
8"
3/4"
1/2"
4 1/2"
2'-2 1/2" DIA
4 1/2"
2'-11 1/2" DIA

SECTION A-A

GENERAL NOTES

1. MANHOLE CASTINGS SHALL BE MANUFACTURED USING GOOD QUALITY GRAY IRON CONFORMING TO CLASS 30 OF A.S.T.M. DESIGNATION A-48. DIMENSIONS AND WEIGHTS SHOWN ON THE DETAILED DRAWINGS SHALL BE CONSIDERED AS MINIMUM REQUIREMENTS AND ANY DEVIATIONS FROM THE DIMENSIONS SHOWN MUST BE SPECIFICALLY APPROVED. THE FINISHED CASTINGS SHALL BE OF UNIFORM QUALITY, FREE FROM BLOWHOLES, POROSITY, HARD SPOTS, SHRINKAGE DISTORTIONS OR OTHER DEFECTS.
2. MANHOLE CASTINGS SHALL BE MANUFACTURED SUCH THAT A COVER MANUFACTURED BY ANY ONE FOUNDRY WILL FIT INTERCHANGEABLY INTO A FRAME MANUFACTURED BY ANOTHER FOUNDRY AND STILL MEET ALLOWABLE CLEARANCES AND NON-ROCKING REQUIREMENTS. THIS WILL REQUIRE MANUFACTURING OF THE MATCHING FACES ON THE COVER AND THE FRAME TO CLOSE TOLERANCES.
3. THE OUTSIDE CIRCUMFERENCE OF THE VERTICAL FACE OF THE COVER AND THE INSIDE CIRCUMFERENCE OF THE VERTICAL FACE IN THE FRAME RECESS SHALL BE MANUFACTURED TO TOLERANCES SUCH THAT THE CLEARANCE BETWEEN THE COVER AND FRAME WILL NOT EXCEED 1/8" AT ANY POINT AROUND THE CIRCUMFERENCE OF THE COVER. THE SEATING SURFACES BETWEEN THE COVER AND FRAME SHALL BE MACHINED SUCH THAT THESE SURFACES SHALL MAKE FULL CONTACT FOR THEIR FULL CIRCUMFERENCE TO PRECLUDE THE COVER FROM ROCKING IN THE FRAME.
4. THE MANHOLE FRAME AND COVER SHALL BE MARKED WITH LETTERING INDICATING THE NAME OF THE MANUFACTURER AND THE YEAR WHEN THE COVER OR FRAME WAS CAST. THE COVER SHALL BE FURTHER IDENTIFIED WITH REGARDS TO OWNERSHIP USING LETTERS AT LEAST 1" IN HEIGHT. THIS IDENTIFICATION SHALL BE "CITY OF WICHITA SEWER DEPARTMENT". THE WORD DEPARTMENT MAY BE ABBREVIATED. THE TEXTURE OF THE TOP SURFACE OF THE COVER SHALL BE MANUFACTURED IN A CHECKERED PATTERN DESIGN AS INDICATED ON THE DRAWINGS. SMOOTH BLOCKOUTS SHALL BE UTILIZED TO HIGHLIGHT THE LETTERING ON THE COVER SURFACE. THE TOTAL AREA OF SMOOTH SURFACE BLOCKOUT SHALL NOT EXCEED THE AREA AS INDICATED ON THE DRAWING. POSITIONING OF SMOOTH BLOCKOUTS AND LETTERING MAY VARY FROM THAT SHOWN ON THE DETAILED DRAWING.

REVISED MAY 1993

JNL DEC. 1981

SEWER APPURTENANCES DETAILS

ADOPTED AS STANDARD DESIGN

BY

CITY OF WICHITA

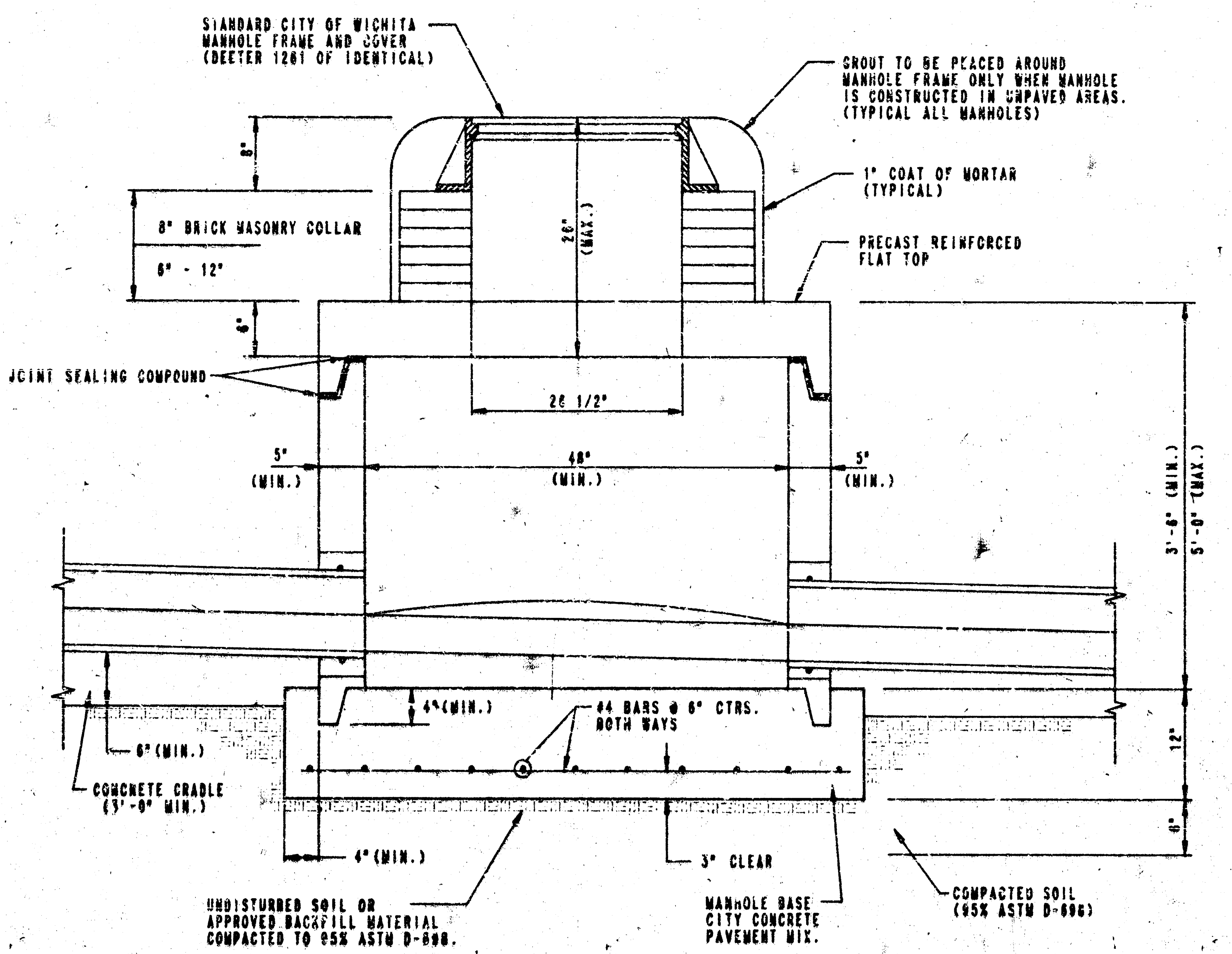
STANDARD CITY OF WICHITA MANHOLE FRAME AND COVER (DEETER 1261 OF IDENTICAL)
GROUT TO BE PLACED AROUND MANHOLE FRAME ONLY WHEN MANHOLE IS CONSTRUCTED IN UNPAVED AREAS. (TYPICAL ALL MANHOLES)
1" COAT OF MORTAR (TYPICAL)
8" BRICK MASONRY COLLAR
6" - 12"
8"
6"
26" (MAX.)
PRECAST REINFORCED FLAT TOP
JOINT SEALING COMPOUND
26 1/2"
5" (MIN.)
48" (MIN.)
5" (MIN.)
3'-6" (MIN.)
5'-0" (MAX.)
4"(MIN.)
#4 BARS @ 6" CTRS. BOTH WAYS
6"(MIN.)
CONCRETE CRADLE (3'-0" MIN.)
12"
6"
4"(MIN.)
3" CLEAR
UNDISTURBED SOIL OR APPROVED BACKFILL MATERIAL COMPACTED TO 95% ASTM D-698.
MANHOLE BASE CITY CONCRETE PAVEMENT MIX.
COMPACTED SOIL (95% ASTM D-698)

TYPE P
SHALLOW MANHOLE
(PRECAST)

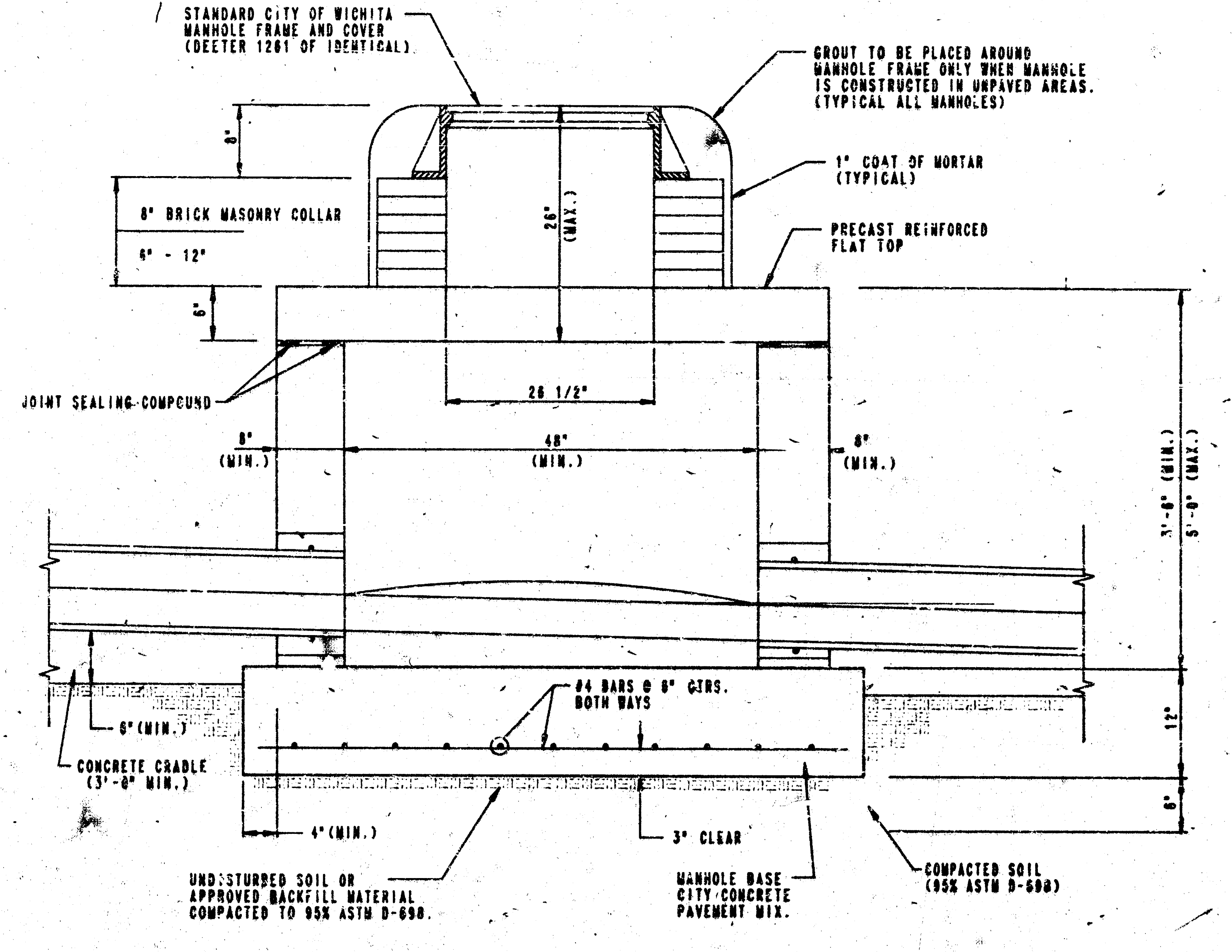
STANDARD CITY OF WICHITA MANHOLE FRAME AND COVER (DEETER 1261 OF IDENTICAL)
GROUT TO BE PLACED AROUND MANHOLE FRAME ONLY WHEN MANHOLE IS CONSTRUCTED IN UNPAVED AREAS. (TYPICAL ALL MANHOLES)
1" COAT OF MORTAR (TYPICAL)
8" BRICK MASONRY COLLAR
6" - 12"
8"
6"
26" (MAX.)
PRECAST REINFORCED FLAT TOP
JOINT SEALING COMPOUND
26 1/2"
8" (MIN.)
48" (MIN.)
8" (MIN.)
3'-6" (MIN.)
5'-0" (MAX.)
#4 BARS @ 6" CTRS. BOTH WAYS
6"(MIN.)
CONCRETE CRADLE (3'-0" MIN.)
12"
6"
4"(MIN.)
3" CLEAR
UNDISTURBED SOIL OR APPROVED BACKFILL MATERIAL COMPACTED TO 95% ASTM D-698.
MANHOLE BASE CITY CONCRETE PAVEMENT MIX.
COMPACTED SOIL (95% ASTM D-698)

TYPE C
SHALLOW MANHOLE
(CAST-IN-PLACE)

PRECAST MANHOLE NOTES

1. ALL PRECAST CONCRETE MANHOLE SECTIONS SHALL CONFORM TO THE LATEST REVISION OF A.S.T.M. C478 AS MODIFIED BY THE SPECIFICATIONS.
2. APPROVED FLEXIBLE WATERSTOP GASKETS SHALL BE INSTALLED TO JOIN THE SEWER TO THE MANHOLE WALL WHEN PLASTIC PIPE IS USED. FOR OTHER TYPES OF PIPE THE SEWER SHALL BE GROUTED IN PLACE WITH NON-SHRINK GROUT.
3. NON-SHRINK GROUT SHALL BE NON-METALLIC TYPE.
4. PIPES INSTALLED WITHIN THE EXCAVATION MADE FOR THE MANHOLE SHALL BE CRADLED WITH CONCRETE TO THE LIMITS OF THE MANHOLE EXCAVATION (3' MIN.). WHEN CLAY PIPE IS USED, THE CRADLE SHALL EXTEND TO THE FIRST JOINT OUTSIDE THE MANHOLE (3' MIN.). THE CRADLE SHALL BE TERMINATED AT THE CLAY PIPE JOINT IN A MANNER WHICH WILL MAINTAIN THE FLEXIBILITY OF THE JOINT. COST OF CRADLE WITHIN MANHOLE EXCAVATION OR TO CLAY PIPE JOINTS ADJACENT TO MANHOLE SHALL BE INCLUDED IN THE UNIT PRICE BID FOR THE MANHOLE.
5. ALL INSIDE SURFACES OF THE CONCRETE MANHOLE WHICH WOULD BE EXPOSED TO SEWER GAS SHALL BE COATED WITH 2 COATS TNEMEC SERIES 66 HI-BUILD EPOXOLINE, DRY THICKNESS OF 6 MILS (MIN.).
6. EXTERIOR MANHOLE WALLS SHALL BE COATED WITH 1 COAT MOBILARMA 633 BITUMINOUS COATING.
7. JOINT SEALING COMPOUND SHALL BE KENT SEAL NO. 2 OR APPROVED EQUAL.
8. PRECAST MANHOLES SHALL BE SET AT LEAST 4 INCHES INTO THE MANHOLE BASE.
9. TOP OF MANHOLE FLOOR SLAB SHALL BE AT LEAST 3 INCHES BELOW THE FLOW LINE OF THE OUTLET PIPE TO INSURE SUFFICIENT MINIMUM THICKNESS OF SHAPED INVERT.
10. LIFTING HOLES SHALL BE FILLED WITH NON-SHRINK GROUT AND THE INTERIOR SURFACE COATED AS SPECIFIED.
11. MORTAR USED IN MASONRY CONSTRUCTION SHALL CONTAIN 8 SACKS OF CEMENT PER CUBIC YARD. CONCRETE USED IN MANHOLE BASES SHALL CONFORM TO THE REQUIREMENTS OF CONCRETE FOR-CONCRETE PAVEMENT CONSTRUCTION AS SPECIFIED IN THE CITY STANDARD PAVING SPECIFICATIONS USING CITY CONCRETE PAVEMENT MIX WITHOUT AIR ENTRAINING ADMIXTURE. MORTAR SHALL BE PLACED AROUND THE MANHOLE RING AS SHOWN ON THE DRAWINGS WHEN MANHOLES ARE CONSTRUCTED IN UNPAVED AREAS. MANHOLES CONSTRUCTED WHERE PIPE SIZES ARE SMALLER THAN 24" SHALL HAVE AN INSIDE DIAMETER OF 4'. MANHOLES CONSTRUCTED WHERE PIPE SIZES ARE 24" OR LARGER SHALL HAVE AN INSIDE DIAMETER OF 5'. COMPLETED MANHOLE SHALL BE WITHOUT LEAKS AND WATER TIGHT.
12. REINFORCING STEEL SHALL BE INSTALLED IN THE MANHOLE BASES AND SHALL CONSIST OF NO. 4 BARS PLACED ON 6" CENTERS IN BOTH DIRECTIONS. THE MANHOLE BASE REINFORCEMENT SHALL BE PLACED AT LEAST 3" ABOVE THE BOTTOM OF THE MANHOLE BASE. ALL COSTS FOR FURNISHING AND INSTALLING REINFORCING STEEL SHALL BE INCLUDED IN THE UNIT PRICE BID FOR THE MANHOLE.
13. THE FLOORS OF ALL MANHOLES SHALL BE SHAPED WITH FLOW CHANNELS SUCH THAT THE MANHOLES WILL BE SELF CLEANING AND FREE OF AREAS WHERE SOLIDS COULD BE DEPOSITED AS SEWAGE FLOWS THROUGH THE MANHOLE FROM ALL INLET PIPES TO THE OUTLET PIPE. FLOW CHANNELS SHALL BE FORMED TO MATCH THE BOTTOM HALVES OF THE INFLOWING PIPES AND THE OUTFLOWING PIPE AS SHOWN BY THE DRAWINGS. MANHOLE FLOORS SHALL HAVE SLOPES OF 3 INCHES PER FOOT IN THE AREAS OUTSIDE OF THE FLOW CHANNELS SLOPED TOWARD THE FLOW CHANNELS. PIPES LAID THROUGH MANHOLES SHALL HAVE THE TOP HALF REMOVED TO NEAT LINES FOR THE FULL INSIDE DIAMETER OF THE MANHOLE. MANHOLE FLOORS SHALL THEN BE SHAPED AROUND THE BOTTOM HALF OF THE PIPE WHICH FORMS THE FLOW CHANNEL.
14. MANHOLE COVER CASTINGS AND MANHOLE FRAME CASTINGS SHALL CONFORM TO THE REQUIREMENTS AS INDICATED IN THE STANDARD SPECIFICATIONS AND AS SHOWN IN THE STANDARD DETAIL DRAWING.
15. THE CROWNS OF INFLOWING PIPES SHALL NEVER BE SET LOWER THAN THE CROWN OF THE OUTFLOWING PIPE.
16. A BRICK MASONRY COLLAR SHALL BE INSTALLED BETWEEN THE CAST IRON FRAME AND THE PRECAST REINFORCED FLAT TOP. THE COLLAR WILL HAVE 8" WALLS AND A VERTICAL HEIGHT OF 6" MINIMUM AND 18" MAXIMUM. A 1" COAT OF MORTAR WILL BE PLASTERED ON THE OUTSIDE OF THE COLLAR.
17. SHALLOW MANHOLES TYPE "P" SHALL BE BID AS SHALLOW MANHOLES FOR THE TYPE AND DIAMETER INDICATED. ALL MANHOLE DIAMETERS WILL BE 4' UNLESS INDICATED OTHERWISE.

CAST-IN-PLACE MANHOLE NOTES

1. APPROVED FLEXIBLE WATERSTOP GASKETS SHALL BE INSTALLED TO JOIN THE SEWER TO THE MANHOLE WALL WHEN PLASTIC PIPE IS USED. FOR OTHER TYPES OF PIPE THE SEWER SHALL BE GROUTED IN PLACE WITH NON-SHRINK GROUT.
2. NON-SHRINK GROUT SHALL BE NON-METALLIC TYPE.
3. PIPES INSTALLED WITHIN THE EXCAVATION MADE FOR THE MANHOLE SHALL BE CRADLED WITH CONCRETE TO THE LIMITS OF THE MANHOLE EXCAVATION (3' MIN.). WHEN CLAY PIPE IS USED, THE CRADLE SHALL EXTEND TO THE FIRST JOINT OUTSIDE THE MANHOLE (3' MIN.). THE CRADLE SHALL BE TERMINATED AT THE CLAY PIPE JOINT IN A MANNER WHICH WILL MAINTAIN THE FLEXIBILITY OF THE JOINT. COST OF CRADLE WITHIN MANHOLE EXCAVATION OR TO CLAY PIPE JOINTS ADJACENT TO MANHOLE SHALL BE INCLUDED IN THE UNIT PRICE BID FOR THE MANHOLE.
4. JOINT SEALING COMPOUND SHALL BE KENT SEAL NO. 2 OR APPROVED EQUAL.
5. TOP OF MANHOLE FLOOR SLAB SHALL BE AT LEAST 3 INCHES BELOW THE FLOW LINE OF THE OUTLET PIPE TO INSURE SUFFICIENT MINIMUM THICKNESS OF SHAPED INVERT.
6. MORTAR USED IN MASONRY CONSTRUCTION SHALL CONTAIN 8 SACKS OF CEMENT PER CUBIC YARD. CONCRETE USED IN MANHOLE WALLS AND BASES SHALL CONFORM TO THE REQUIREMENTS OF CONCRETE FOR CONCRETE PAVEMENT CONSTRUCTION AS SPECIFIED IN THE CITY STANDARD PAVING SPECIFICATIONS USING CITY CONCRETE PAVEMENT MIX WITHOUT AIR ENTRAINING ADMIXTURE. MORTAR SHALL BE PLACED AROUND THE MANHOLE RING AS SHOWN ON THE DRAWINGS WHEN MANHOLES ARE CONSTRUCTED IN UNPAVED AREAS. TYPE "C" MANHOLES CAN BE CONSTRUCTED ONLY WHERE PIPE SIZES ARE 8" OR SMALLER. THE INSIDE DIAMETER OF TYPE "C" MANHOLES SHALL BE 4'. COMPLETED MANHOLE SHALL BE WITHOUT LEAKS AND WATER TIGHT.
7. REINFORCING STEEL SHALL BE INSTALLED IN THE MANHOLE BASE. REINFORCING STEEL SHALL CONSIST OF NO. 4 BARS PLACED ON 6" CENTERS IN BOTH DIRECTIONS. REINFORCING STEEL SHALL BE PLACED AT LEAST 3" ABOVE THE BOTTOM OF THE MANHOLE BASE. COST OF FURNISHING AND INSTALLING REINFORCING STEEL SHALL BE INCLUDED IN THE UNIT PRICE BID FOR THE MANHOLE.
8. THE FLOORS OF ALL MANHOLES SHALL BE SHAPED WITH FLOW CHANNELS SUCH THAT THE MANHOLES WILL BE SELF CLEANING AND FREE OF AREAS WHERE SOLIDS COULD BE DEPOSITED AS SEWAGE FLOWS THROUGH THE MANHOLE FROM ALL INLET PIPES TO THE OUTLET PIPE. FLOW CHANNELS SHALL BE FORMED TO MATCH THE BOTTOM HALVES OF THE INFLOWING PIPES AND THE OUTFLOWING PIPE AS SHOWN BY THE DRAWINGS. MANHOLE FLOORS SHALL HAVE SLOPES OF 3 INCHES PER FOOT IN THE AREAS OUTSIDE OF THE FLOW CHANNELS SLOPED TOWARD THE FLOW CHANNELS. PIPES LAID THROUGH MANHOLE SHALL HAVE THE TOP HALF REMOVED TO NEAT LINES FOR THE FULL INSIDE DIAMETER OF THE MANHOLE. MANHOLE FLOORS SHALL THEN BE SHAPED AROUND THE BOTTOM HALF OF THE PIPE WHICH FORMS THE FLOW CHANNEL.
9. MANHOLE COVER CASTINGS AND MANHOLE FRAME CASTINGS SHALL CONFORM TO THE REQUIREMENTS AS INDICATED IN THE STANDARD SPECIFICATIONS AND AS SHOWN IN THE STANDARD DETAIL DRAWING.
10. THE CROWNS OF INFLOWING PIPES SHALL NEVER BE SET LOWER THAN THE CROWN OF THE OUTFLOWING PIPE.
11. A BRICK MASONRY COLLAR SHALL BE INSTALLED BETWEEN THE CAST IRON FRAME AND THE PRECAST REINFORCED FLAT TOP. THE COLLAR WILL HAVE 8" WALLS AND A VERTICAL HEIGHT OF 6" MINIMUM AND 18" MAXIMUM. A 1" COAT OF MORTAR WILL BE PLASTERED ON THE OUTSIDE OF THE COLLAR.
12. SHALLOW MANHOLES TYPE "C" SHALL BE BID AS SHALLOW MANHOLES FOR THE TYPE AND DIAMETER INDICATED. ALL MANHOLE DIAMETERS WILL BE 4' UNLESS INDICATED OTHERWISE.

SEWER APPURTENANCES DETAILS

ADOPTED AS STANDARD DESIGN
BY
CITY OF WICHITA

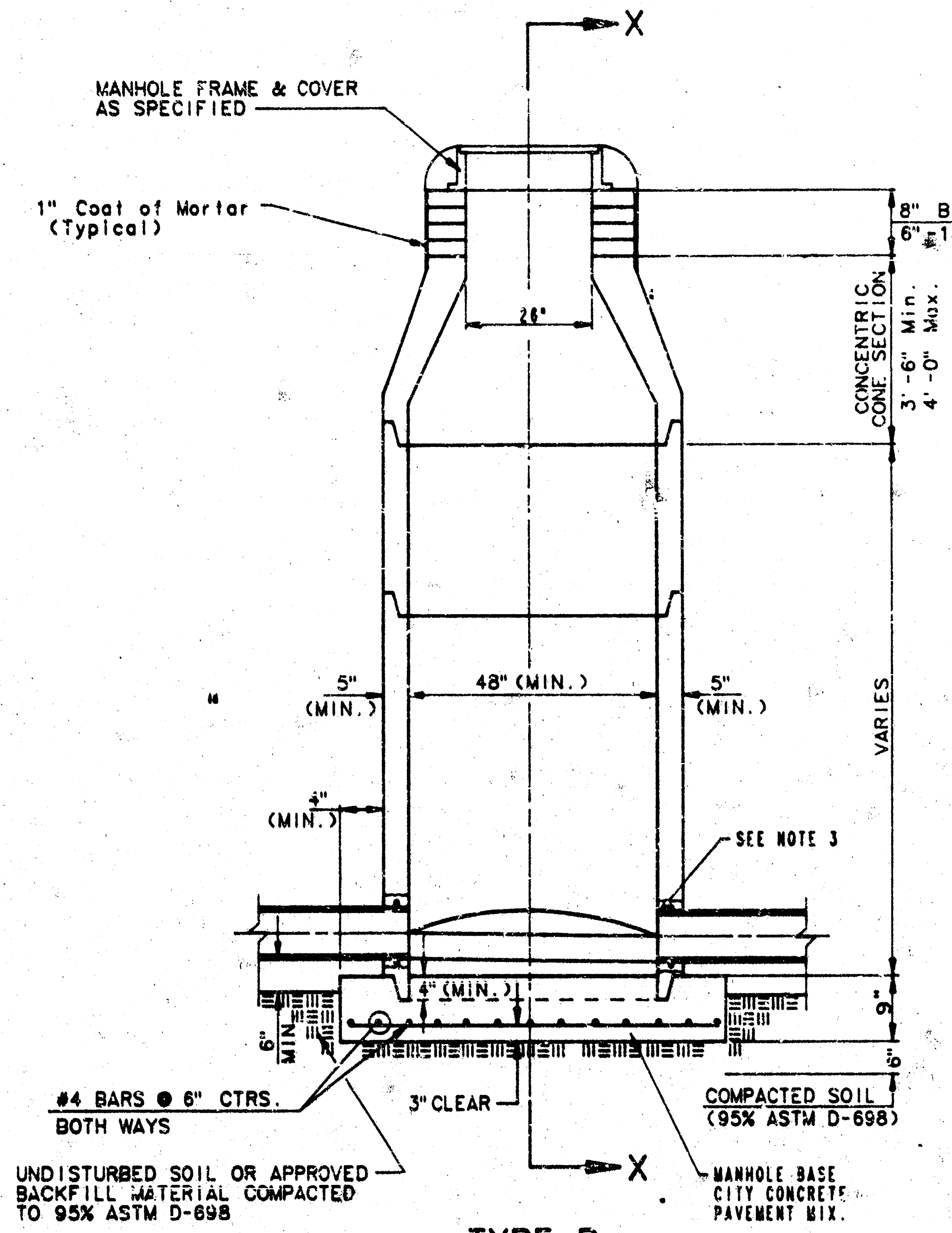
X
MANHOLE FRAME & COVER AS SPECIFIED
1" Coat of Mortar (Typical)
8" Brick Masonry Collar
6"-18"
26"
CONCENTRIC CONE SECTION
3'-6" Min. 4'-0" Max.
5" (MIN.)
48" (MIN.)
5" (MIN.)
VARIES
4" (MIN.)
SEE NOTE 3
4" (MIN.)
6" MIN.
9"
6"
#4 BARS @ 6" CTRS. BOTH WAYS
3" CLEAR
COMPACTED SOIL (95% ASTM D-698)
UNDISTURBED SOIL OR APPROVED BACKFILL MATERIAL COMPACTED TO 95% ASTM D-698
MANHOLE BASE CITY CONCRETE PAVEMENT MIX.
X

TYPE P
STANDARD MANHOLE

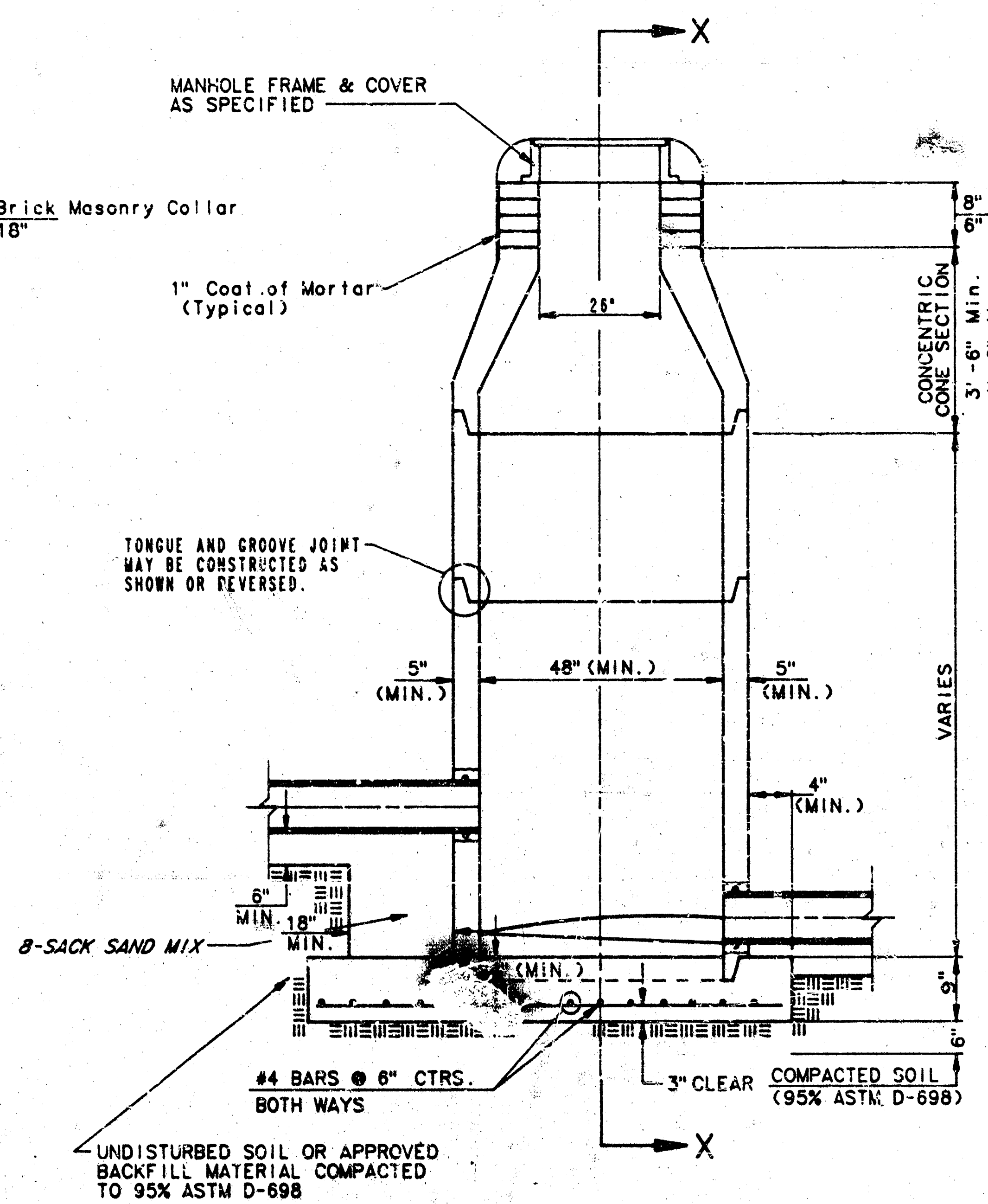
X
MANHOLE FRAME & COVER AS SPECIFIED
1" Coat of Mortar (Typical)
8" Brick Masonry Collar
6"-18"
26"
CONCENTRIC CONE SECTION
3'-6" Min. 4'-0" Max.
TONGUE AND GROOVE JOINT MAY BE CONSTRUCTED AS SHOWN OR REVERSED.
5" (MIN.)
48" (MIN.)
5" (MIN.)
VARIES
4" (MIN.)
6" MIN.
18" MIN.
8-SACK SAND MIX
(MIN.)
9"
6"
#4 BARS @ 6" CTRS. BOTH WAYS
3" CLEAR
COMPACTED SOIL (95% ASTM D-698)
UNDISTURBED SOIL OR APPROVED BACKFILL MATERIAL COMPACTED TO 95% ASTM D-698
X

TYPE P
INSIDE DROP MANHOLE

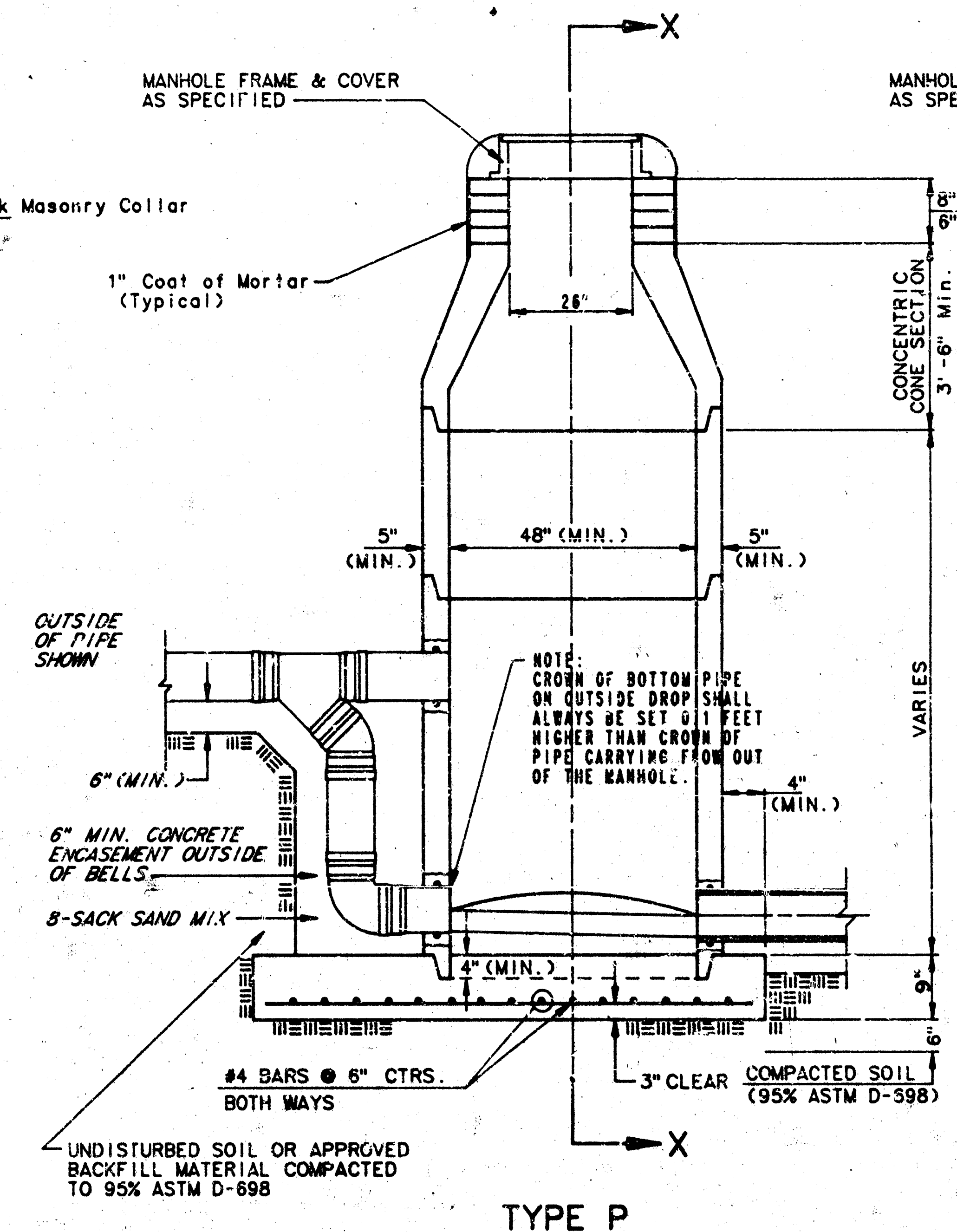
X
MANHOLE FRAME & COVER AS SPECIFIED
1" Coat of Mortar (Typical)
8" Brick Masonry Collar
6"-18"
26"
CONCENTRIC CONE SECTION
3'-6" Min. 4'-0" Max.
5" (MIN.)
48" (MIN.)
5" (MIN.)
OUTSIDE OF PIPE SHOWN
NOTE: CROWN OF BOTTOM PIPE ON OUTSIDE DROP SHALL ALWAYS BE SET 0.1 FEET HIGHER THAN CROWN OF PIPE CARRYING FLOW OUT OF THE MANHOLE.
6" (MIN.)
6" MIN. CONCRETE ENCASEMENT OUTSIDE OF BELLS
8-SACK SAND MIX
VARIES
4" (MIN.)
4" (MIN.)
9"
6"
#4 BARS @ 6" CTRS. BOTH WAYS
3" CLEAR
COMPACTED SOIL (95% ASTM D-698)
UNDISTURBED SOIL OR APPROVED BACKFILL MATERIAL COMPACTED TO 95% ASTM D-698
X

TYPE P
OUTSIDE DROP MANHOLE

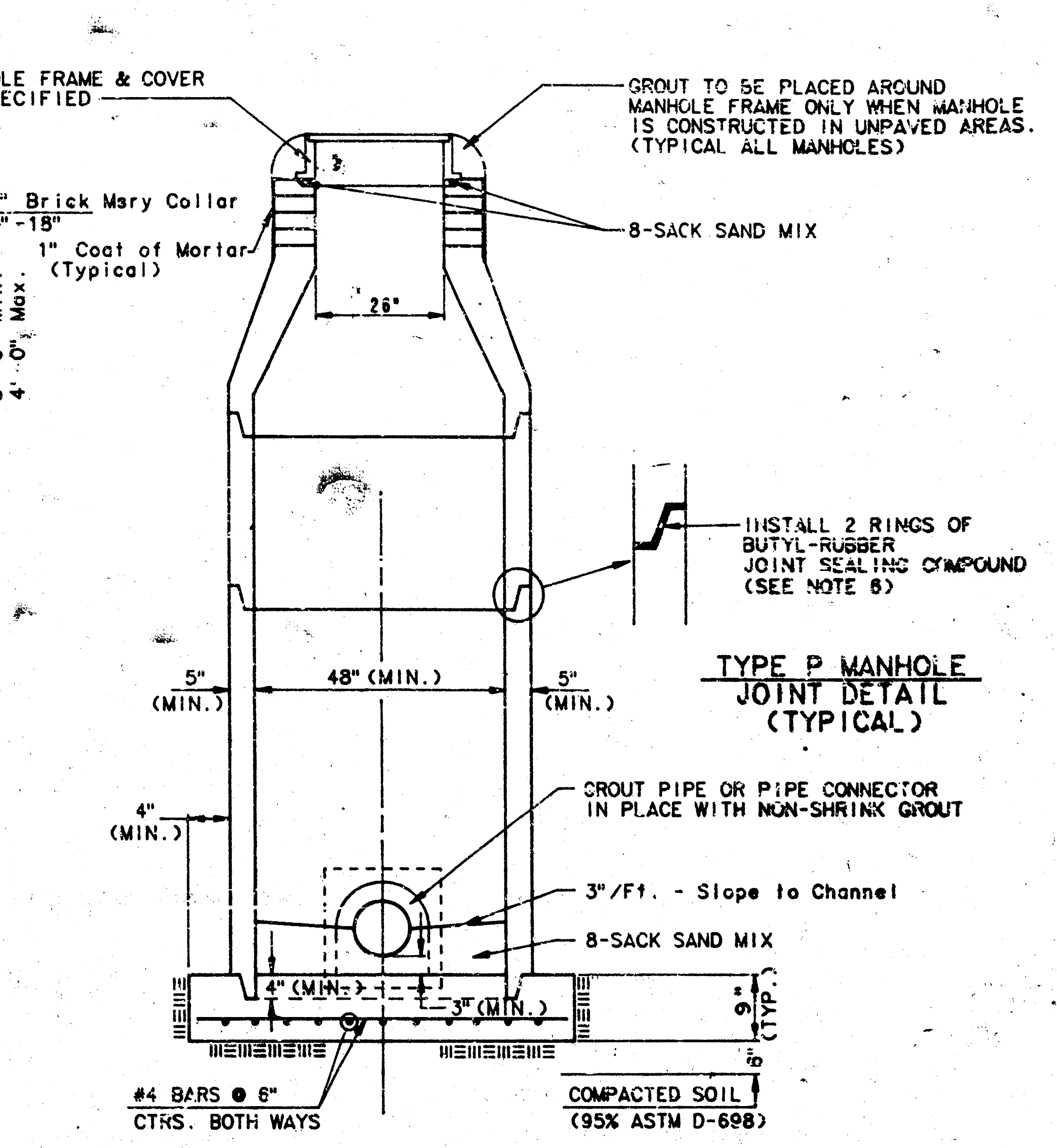
MANHOLE FRAME & COVER AS SPECIFIED
GROUT TO BE PLACED AROUND MANHOLE FRAME ONLY WHEN MANHOLE IS CONSTRUCTED IN UNPAVED AREAS. (TYPICAL ALL MANHOLES)
8" Brick Mary Collar
6"-18"
1" Coat of Mortar (Typical)
8-SACK SAND MIX
26"
CONCENTRIC CONE SECTION
3'-6" Min. 4'-0" Max.
INSTALL 2 RINGS OF BUTYL-RUBBER JOINT SEALING COMPOUND (SEE NOTE 6)
5" (MIN.)
48" (MIN.)
5" (MIN.)
VARIES
4" (MIN.)
GROUT PIPE OR PIPE CONNECTOR IN PLACE WITH NON-SHRINK GROUT
3"/Ft. - Slope to Channel
8-SACK SAND MIX
4" (MIN.)
3" (MIN.)
9" (TYP.)
6"
#4 BARS @ 6" CTRS. BOTH WAYS
COMPACTED SOIL (95% ASTM D-698)

TYPE P MANHOLE
JOINT DETAIL
(TYPICAL)

SECTION X
(TYPICAL)

GENERAL NOTES

PRECAST MANHOLE NOTES

1. ALL PRECAST CONCRETE MANHOLE SECTIONS SHALL CONFORM TO THE LATEST REVISION OF A.S.T.M. C478 AS MODIFIED BY THE SPECIFICATIONS.

2. NON-SHRINK GROUT SHALL BE NON-METALLIC TYPE.

3. APPROVED FLEXIBLE WATERSTOP GASKETS SHALL BE INSTALLED TO JOIN THE SEWER TO THE MANHOLE WALL WHEN A.B.S. COMPOSITE PIPE OR P.V.C. PIPE IS USED. FOR OTHER TYPES OF PIPE THE SEWER SHALL BE GROUTED IN PLACE WITH NON-SHRINK GROUT. THE SEWER PIPE SHALL BE SUPPORTED WITH CONCRETE ENCASEMENT A MINIMUM OF 3 FEET FROM THE MANHOLE WALL AND TO THE FIRST JOINT FOR V.C.P. SUCH THAT THE JOINT REMAINS FLEXIBLE.

4. ALL INSIDE SURFACES OF THE CONCRETE MANHOLE WHICH WOULD BE EXPOSED TO SEWER GAS SHALL BE COATED WITH 2 COATS TNEMEC SERIES 66 HI-BUILD EPOXOLINE, DRY THICKNESS OF 8 MILS (MIN.)

5. EXTERIOR MANHOLE WALLS SHALL BE COATED WITH 1 COAT MOBILARMA 633 BITUMINUS COATING.

6. JOINT SEALING COMPOUND SHALL BE KENT SEAL NO. 2 OR APPROVED EQUAL.

7. PRECAST MANHOLES SHALL BE SET AT LEAST 4 INCHES INTO THE MANHOLE BASE.

8. TOP OF MANHOLE FLOOR SLAB SHALL BE AT LEAST 3 INCHES BELOW THE FLOW LINE OF THE OUTLET PIPE TO INSURE SUFFICIENT MINIMUM THICKNESS OF SHAPED INVERT.

9. LIFTING HOLES SHALL BE FILLED WITH NON-SHRINK GROUT AND THE INTERIOR SURFACE COATED AS SPECIFIED.

10. MORTAR USED IN MASONRY CONSTRUCTION SHALL CONTAIN 8 SACKS OF CEMENT PER CUBIC YARD. CONCRETE USED IN MANHOLE BASES SHALL CONFORM TO THE REQUIREMENTS OF CONCRETE FOR CONCRETE PAVEMENT CONSTRUCTION AS SPECIFIED IN THE CITY STANDARD PAVING SPECIFICATIONS USING CITY CONCRETE PAVEMENT MIX WITHOUT AIR ENTRAINING ADMIXTURE. MORTAR SHALL BE PLACED AROUND THE MANHOLE RING AS SHOWN ON THE DRAWINGS WHEN MANHOLES ARE CONSTRUCTED IN UNPAVED AREAS. MANHOLES CONSTRUCTED WHERE PIPE SIZES ARE SMALLER THAN 24" SHALL HAVE AN INSIDE DIAMETER OF 4'. MANHOLES CONSTRUCTED WHERE PIPE SIZES ARE 24" OR LARGER SHALL HAVE AN INSIDE DIAMETER OF 5'. COMPLETED MANHOLE SHALL BE WITHOUT LEAKS AND WATER TIGHT.

11. REINFORCING STEEL SHALL BE INSTALLED IN THE MANHOLE BASES AND SHALL CONSIST OF NO. 4 BARS PLACED ON 6" CENTERS IN BOTH DIRECTIONS. THE MANHOLE BASE REINFORCEMENT SHALL BE PLACED AT LEAST 3" ABOVE THE BOTTOM OF THE MANHOLE BASE. ALL COSTS FOR FURNISHING AND INSTALLING REINFORCING STEEL SHALL BE INCLUDED IN THE UNIT PRICE BID FOR THE MANHOLE.

12. OPENINGS SHALL BE CUT INTO THE MANHOLE WALL WHEN OUTSIDE DROPS ARE CONSTRUCTED ON EXISTING MANHOLES. SUCH OPENINGS CUT INTO EXISTING MANHOLES SHALL BE AS SMALL AS PRACTICAL TO FACILITATE INSTALLING AND GROUTING THE NEW PIPE IN PLACE. WATERSTOP GASKETS SHALL BE USED WITH P.V.C. AND A.B.S. COMPOSITE PIPE. THE NEW PIPE SHALL BE GROUTED INTO THE OPENING USING AN APPROVED NONSHRINK GROUT FOR THE FULL MANHOLE WALL THICKNESS. THE EXTERIOR OF THE COMPLETED CONNECTION SHALL BE SEALED WITH AN APPROVED BITUMINOUS COATING SUCH THAT THE CONNECTION WILL BE WATER TIGHT. FLOOR OF MANHOLE SHALL BE MODIFIED TO FORM NEW FLOW CHANNEL FOR THE NEW CONNECTION AS INDICATED BY THE DRAWING. THIS WORK, INCLUDING MODIFICATION OF MANHOLE FLOOR, SHALL BE PAID FOR AT THE UNIT PRICE BID FOR OUTSIDE DROP STACK CONSTRUCTED ON EXISTING MANHOLE.

13. THE FLOORS OF ALL MANHOLES SHALL BE SHAPED WITH FLOW CHANNELS SUCH THAT THE MANHOLES WILL BE SELF CLEANING AND FREE OF AREAS WHERE SOLIDS COULD BE DEPOSITED AS SEWAGE FLOWS THROUGH THE MANHOLE FROM ALL INLET PIPES TO THE OUTLET PIPE. FLOW CHANNELS SHALL BE FORMED TO MATCH THE BOTTOM HALVES OF THE INFLOWING PIPES AND THE OUTFLOWING PIPE AS SHOWN BY THE DRAWINGS EXCEPT FOR INSIDE DROP MANHOLES. FLOW CHANNELS FOR INSIDE DROP MANHOLES SHALL BE CONSTRUCTED AS INDICATED BY THE DRAWING. MANHOLE FLOORS SHALL HAVE SLOPES OF 3 INCHES PER FOOT IN THE AREAS OUTSIDE OF THE FLOW CHANNELS SLOPED TOWARD THE FLOW CHANNELS. PIPES LAID THROUGH MANHOLES SHALL HAVE THE TOP HALF REMOVED TO NEAT LINES FOR THE FULL INSIDE DIAMETER OF THE MANHOLE. MANHOLE FLOORS SHALL THEN BE SHAPED AROUND THE BOTTOM HALF OF THE PIPE WHICH FORMS THE FLOW CHANNEL.

14. PIPES INSTALLED WITHIN THE EXCAVATION MADE FOR THE MANHOLE SHALL BE CRADLED WITH CONCRETE TO THE LIMITS OF THE MANHOLE EXCAVATION. WHEN CLAY PIPE IS USED, THE CRADLE SHALL EXTEND TO THE FIRST JOINT OUTSIDE THE MANHOLE. THE CRADLE SHALL BE TERMINATED AT THE CLAY PIPE JOINT IN A MANNER WHICH WILL MAINTAIN THE FLEXIBILITY OF THE JOINT. COST OF CRADLE WITHIN MANHOLE EXCAVATION OR TO CLAY PIPE JOINTS ADJACENT TO MANHOLE SHALL BE INCLUDED IN THE UNIT PRICE BID FOR THE MANHOLE.

15. MANHOLE COVER CASTINGS AND MANHOLE FRAME CASTINGS SHALL CONFORM TO THE REQUIREMENTS AS INDICATED IN THE STANDARD SPECIFICATIONS AND AS SHOWN IN THE STANDARD DETAIL DRAWING.

16. THE VERTICAL FREE FALL DROP INSIDE MANHOLES SHALL NOT EXCEED 2'.

THE CROWNS OF INFLOWING PIPES SHALL NEVER BE SET LOWER THAN THE CROWN OF THE OUTFLOWING PIPE.

17. STANDARD MANHOLES AND STANDARD INSIDE DROP MANHOLES SHALL BE BID AS STANDARD MANHOLES FOR THE TYPE AND DIAMETER INDICATED. OUTSIDE DROP MANHOLES SHALL BE BID AS STANDARD OUTSIDE DROP MANHOLES FOR THE TYPE AND DIAMETER INDICATED. ALL MANHOLE DIAMETERS WILL BE 4' UNLESS INDICATED OTHERWISE.

18. A BRICK MASONRY COLLAR SHALL BE INSTALLED BETWEEN THE CAST IRON FRAME AND THE CONCENTRIC CONE. THE COLLAR WILL HAVE 8" WALLS AND A VERTICAL HEIGHT OF 6" MINIMUM AND 18" MAXIMUM. A 1" COAT OF MORTAR WILL BE PLASTERED ON THE OUTSIDE OF THE COLLAR.

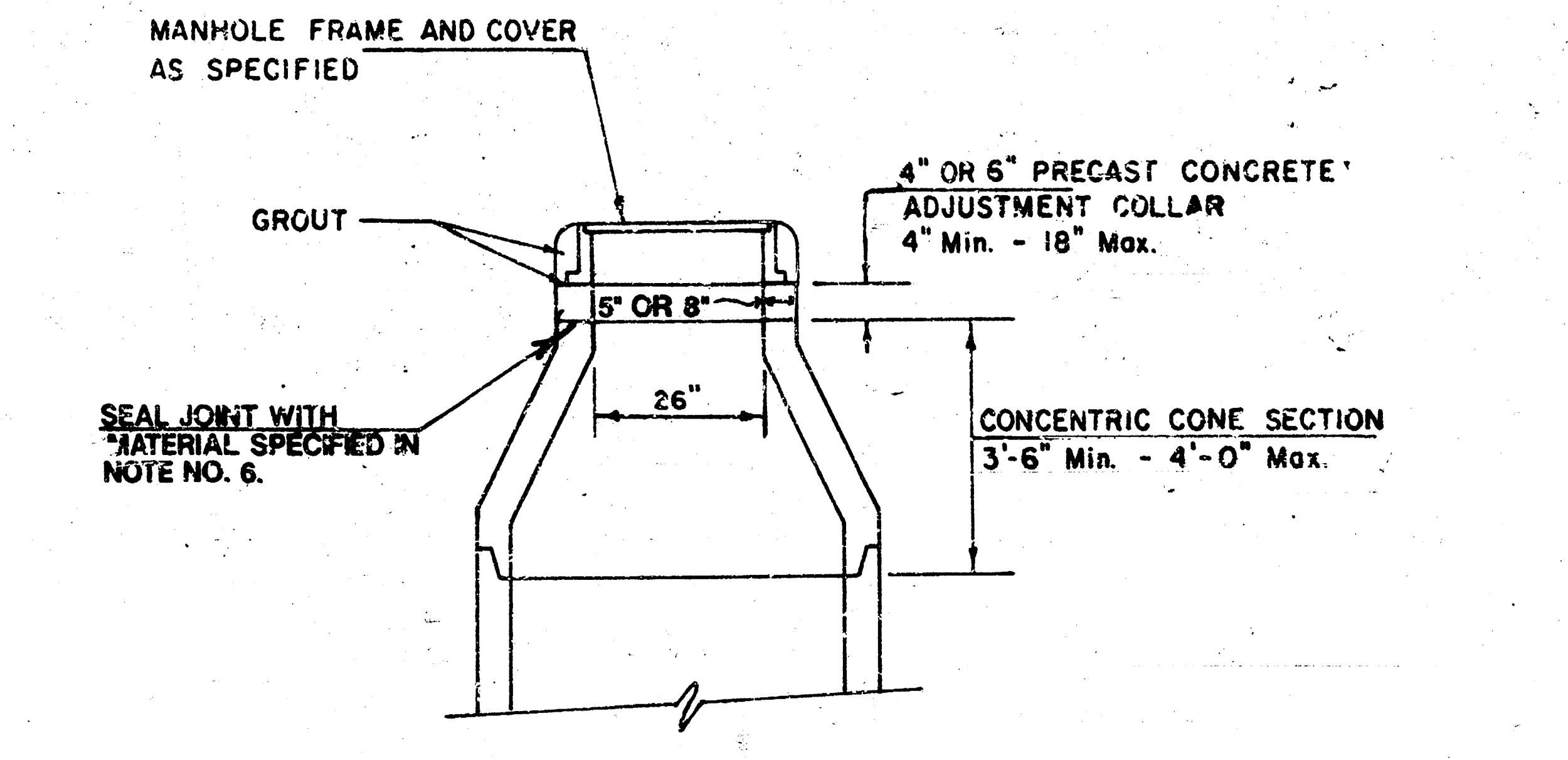
MANHOLE FRAME AND COVER AS SPECIFIED
GROUT
4" OR 6" PRECAST CONCRETE ADJUSTMENT COLLAR 4" Min. - 18" Max.
5" OR 8"
26"
SEAL JOINT WITH MATERIAL SPECIFIED IN NOTE NO. 6.
CONCENTRIC CONE SECTION 3'-6" Min. - 4'-0" Max.

ALTERNATE CONSTRUCTION
IN UNPAVED AREAS

REVISED NOV. 1993
NOTE NO. 16 REVISED JAN. 1991
Revised 3-21-89
Revised 8-10-88
Revised: June 12, 1986