STORM WATER SEWER TO SERVE
QUIKTRIP 8th ADDITION
STORE #315 at KELLOGG & MAIZE
Private Project Number
1090 PPS (607861)
CITY OF WICHITA, KANSAS

Neil D. Cable, P.E.   City Engineer

January 2003

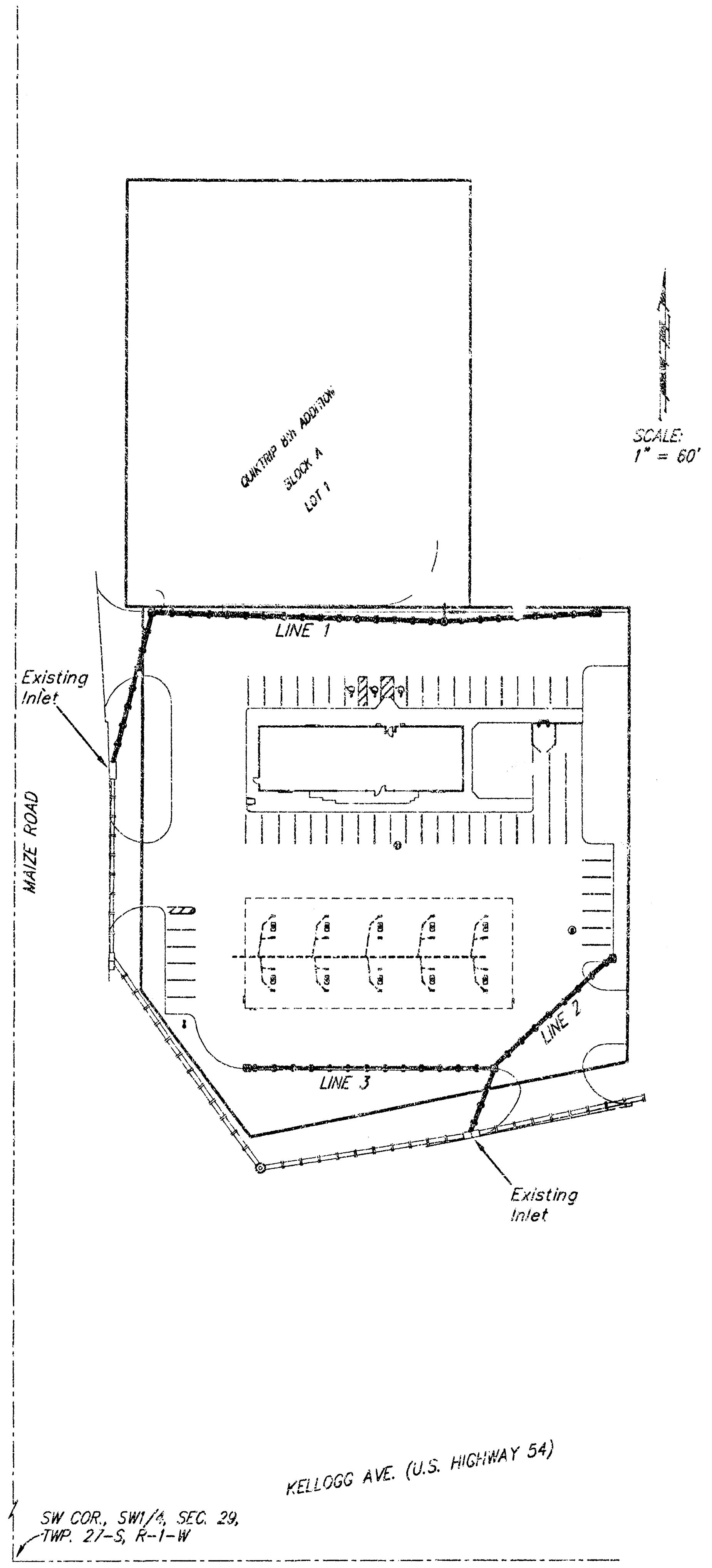

LEGAL DESCRIPTION:

Lot 1, Block A, Quiktrip 8th Addition
Wichita, Sedgwick County, Kansas

BENCHMARKS:

1. *Maize Rd & McCormick (Hidden Valley)*
   City of Wichita Bench Mark. 0.5 miles south of Maple.
   NE corner RCB over Cowskin, south of Hidden Valley Estates.

   Elevation: 131.53 City Datum

2. *Railroad spike in power pole east side of Maize Road approximately 256 feet south of center line of Ringer 12.5 feet east and 14.5 feet north of inlet.*

   Elevation: 134.30 City Datum

INDEX:

Cover	1
Plan/Profile Sheets	2-3
Inlet & Sediment Barrier Detail	4
BMP Erosion Detail	5
Copy of Plat	6

APPROVED AS NOTED
BY CITY ENGINEER OF WICHITA

Storm Sewers VRH 1/17/03

NOTE TO CONTRACTORS

Inspection and testing for this project is to be provided by a Licensed Consulting Engineering Firm under contract with the Owner/Developer. Said inspection to be in accordance with the City of Wichita standard construction engineering practices and certified by a Licensed Professional Engineer. No work shall be performed in dedicated easements or public right-of-way by the Contractor without such inspection nor shall any work be commenced without written authorization by the City Engineer. All Construction and Materials shall comply with the City of Wichita Specifications and Standards (on file and available in the City Engineer's Office).

GENERAL NOTES:

1. *Contractor will be required to provide notice to utility companies a minimum of forty-eight (48) hours prior to any excavation, as follows:*

   Kansas One-Call 687-2470

   The Contractor must notify the following in case of an emergency:

Cox Communications	262-4270
Kansas Gas Service Company	1-888-482-4950
Westar Energy (Electric)	383-8650
Aquila Energy (Gas)	1-800-303-0357
Southwestern Bell Telephone Company	1-800-286-8313
City of Wichita Water Department	268-4908
City of Wichita Sewer Maint. (San. Sewer)	268-4024
City of Wichita Storm Sewer Maint.	268-4090
City of Wichita Traffic Maint.	268-4034

2. *Utility service lines, poles, valve boxes, meters, et cetera are to be adjusted as necessary by others prior to construction unless the plans specifically call for their adjustment by the Contractor or unless the plans specifically identify a utility to be adjusted by its owner during construction. Existing utilities and their location, as shown on the plans represent the best information obtainable for design and shall be field verified. The contractor will be required to work around existing utilities within the right-of-way which do not conflict with proposed construction.*

3. *Cuts made to paved surfaces on public property will be repaired by the City's contractor and charged against the owner/applicant. Unit repair prices are available from the City at 268-4418. A surcharge may be applicable: call 268-4418 for details. Repair costs to be paid prior to release of sewer service if sewer service is affected. Contractor shall obtain permit prior to construction.*

4. *Contractor shall not start work on the project until the project inspector is assigned to the project and is present on the site. Contractor shall not start on the project until all necessary bonds and permits have been obtained. Any work done without inspection will be required to be uncovered for inspection.*

5. *Rubble from the removal of miscellaneous structures and excess excavation which is to be wasted shall be disposed of on sites to be provided by the Contractor. These sites shall be approved by the Engineer as to suitability, appearance and site location. Locations that, in the opinion of the Engineer, will leave an unsightly appearance will not be approved. All disposal sites must be approved by the Kansas Department of Health and Environment. Material either stockpiled or disposed of in a flood plain would require a Kansas State Board of Agriculture permit. Any material dumped in waters of the United States or wetlands is subject to U.S. Corps. of Engineers permitting regulations. Any material buried or stockpiled beyond approved construction limits would require additional archaeological investigations unless buried in a previously approved borrow location.*

6. *All storm sewers and appurtenances shall be installed in accordance with the most recent edition of City of Wichita, Kansas Standard Specifications for the Construction of City Projects.*

7. *All disturbed R/W areas not intended for pavement or sidewalk construction shall be seeded with Kansas Premium Fescue Blend at a rate of 8 lb./1000 Sq. Ft., fertilized with a 16-20-6 ratio at a rate of 4 lb./1000 Sq. Ft., and mulched with Prairie Hay at a rate of 92 lb./1000 Sq. Ft. Mulch shall be "potted" with forks or punched into soil to reduce loss due to wind.*

22 OCT 2004

RECORD DRAWINGS

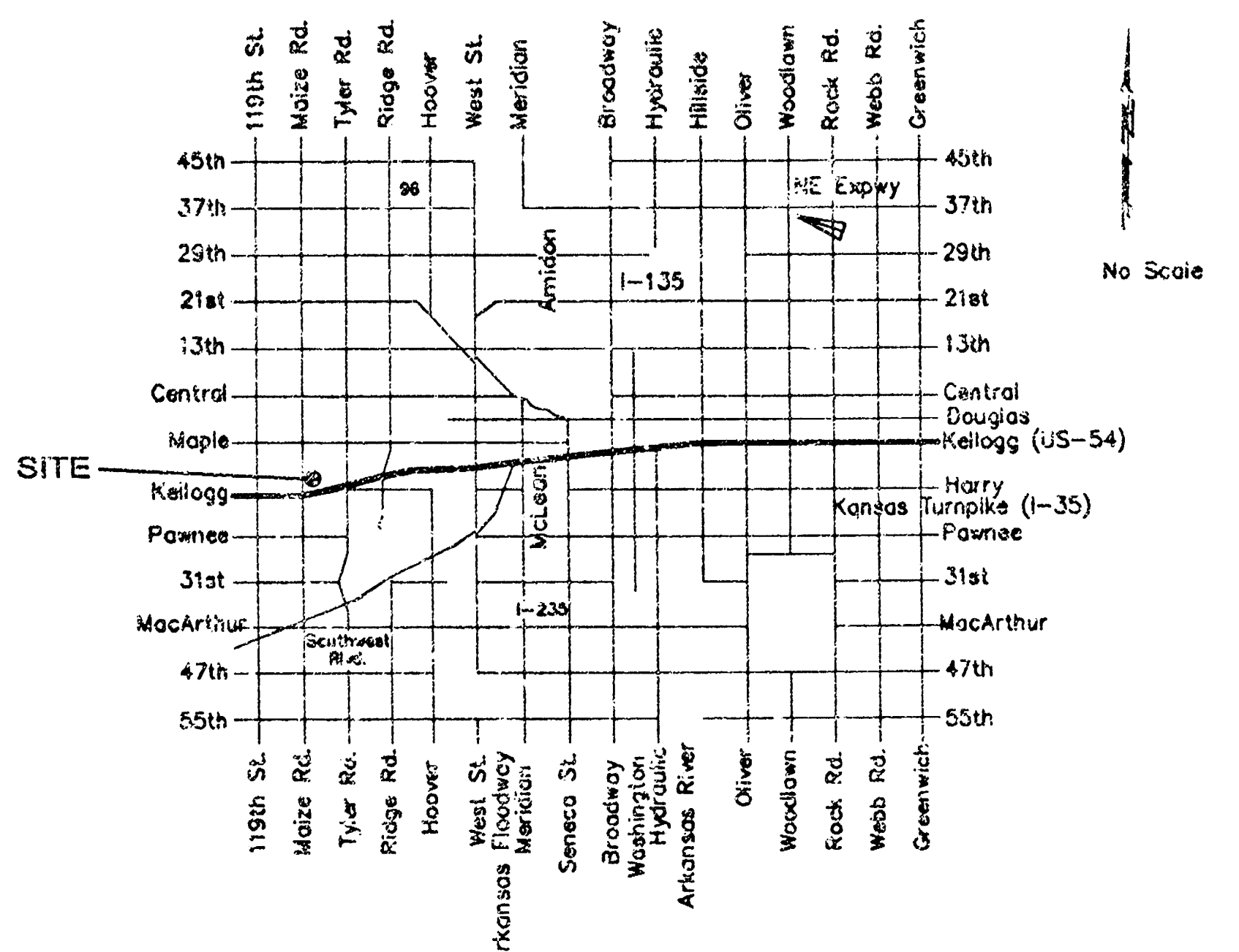

Vicinity Map

LEE M. ULLUM
17034
4-1-04

BAUGHMAN COMPANY P.A.
ENGINEERING, SURVEYING, & PLANNING
316-262-7271 • 315 ELLIS • WICHITA, KANSAS 67211

BENCHMARKS:

1. Maize Rd & McCormick (Hidden Valley)
City of Wichita Bench Mark. 0.5 miles south of Maple.
NE corner RCB over Cowskin, south of Hidden Valley Estates.

Elevation: 131.53 City Datum

2. Railroad spike in power pole east side
of Maize Road approximately 256 feet
south of center line of Ringer 12.5 feet
east and 14.5 feet north of inlet.

Elevation: 134.30 City Datum

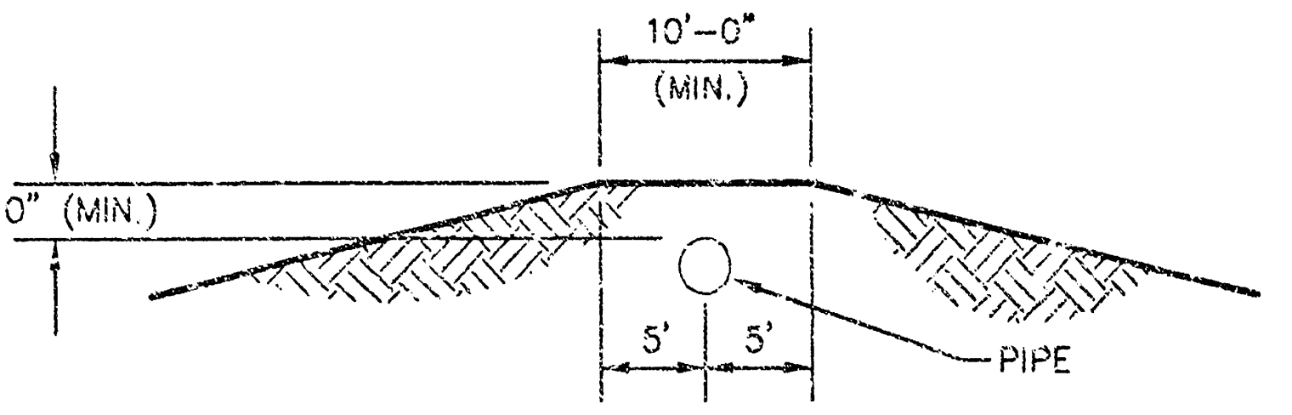
10'-0"
(MIN.)
2'-0" (MIN.)
5'
5'
PIPE

PROTECTIVE FILL DETAIL

MINIMUM PROTECTIVE FILL SHALL BE PROVIDED
IN ALL INSTANCES WHERE COVER OVER THE PROP.
WATER LINE IS LESS THAN (2) FEET.
(COST SUBSIDIARY TO PIPE INSTALLATION)

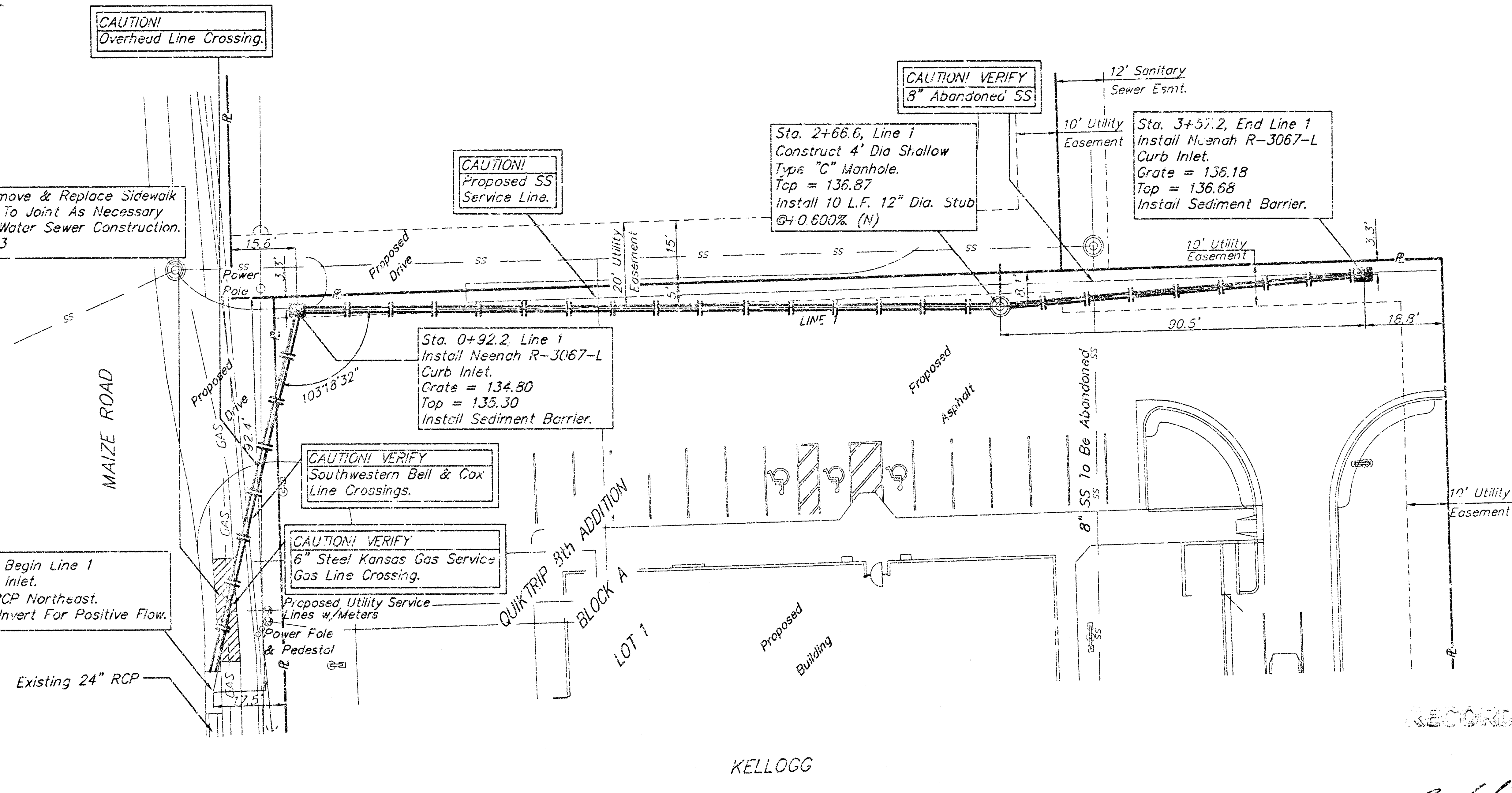
CAUTION!
Overhead Line Crossing.
CAUTION!
Proposed SS
Service Line.
CAUTION! VERIFY
8" Abandoned SS
12' Sanitary
Sewer Esmt.
10' Utility
Easement
Power
Pole
15.6'
3.3'
Proposed
Drive
SS
20' Utility
Easement
15'
5'
LINE 1
8.1'
90.5'
18.8'
10' Utility
Easement
3.3'
Proposed
Asphalt
8" SS To Be Abandoned
MAIZE ROAD
Proposed
Drive
GAS
92.4'
103°18'32"
QUIKTRIP 8th ADDITION
BLOCK A
LOT 1
Proposed
Building
Proposed Utility Service
Lines w/Meters
Power Pole
& Pedestal
Existing 24" RCP
17.5'
KELLOGG

Sawcut, Remove & Replace Sidewalk
From Joint To Joint As Necessary
For Storm Water Sewer Construction.
See Note #3

Sta. 2+66.6, Line 1
Construct 4' Dia Shallow
Type "C" Manhole.
Top = 136.87
Install 10 L.F. 12" Dia. Stub
@+0.600% (N)

Sta. 3+57.2, End Line 1
Install Neenah R-3067-L
Curb Inlet.
Grate = 136.18
Top = 136.68
Install Sediment Barrier.

Sta. 0+92.2, Line 1
Install Neenah R-3067-L
Curb Inlet.
Grate = 134.80
Top = 135.30
Install Sediment Barrier.

CAUTION! VERIFY
Southwestern Bell & Cox
Line Crossings.

CAUTION! VERIFY
6" Steel Kansas Gas Service
Gas Line Crossing.

Sta. 0+00.0, Begin Line 1
Core Existing inlet.
Extend 15" RCP Northeast.
Reconstruct Invert For Positive Flow.

Contractor Shall Follow All
Applicable Best Management Practices (BMP)
For Erosion Control, See Sheet 5

SCALE:
1" = 20' HORIZONTAL
1" = 5' VERTICAL

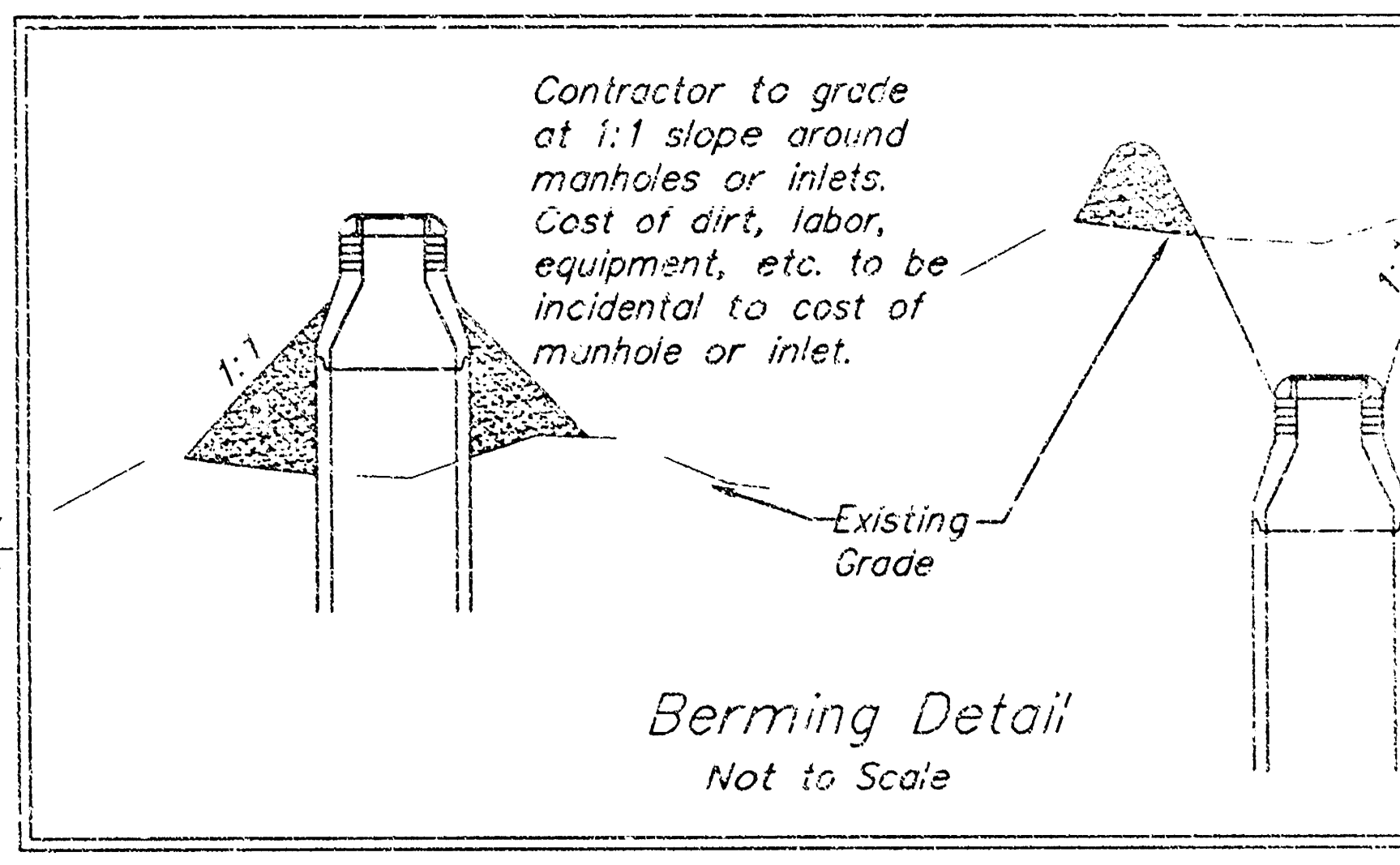
1:1
1:1
Existing
Grade

Contractor to grade
at 1:1 slope around
manholes or inlets.
Cost of dirt, labor,
equipment, etc. to be
incidental to cost of
manhole or inlet.

Berming Detail
Not to Scale

RECORD DRAWINGS

Contractor To Use Extreme Caution
When Excavating Near Utility Lines.
Contractor To Hand Dig To Expose All
Utility Lines Prior To Storm Sewer Installation.
Verify Depth To Determine Conflict If Any.

22 OCT 2004

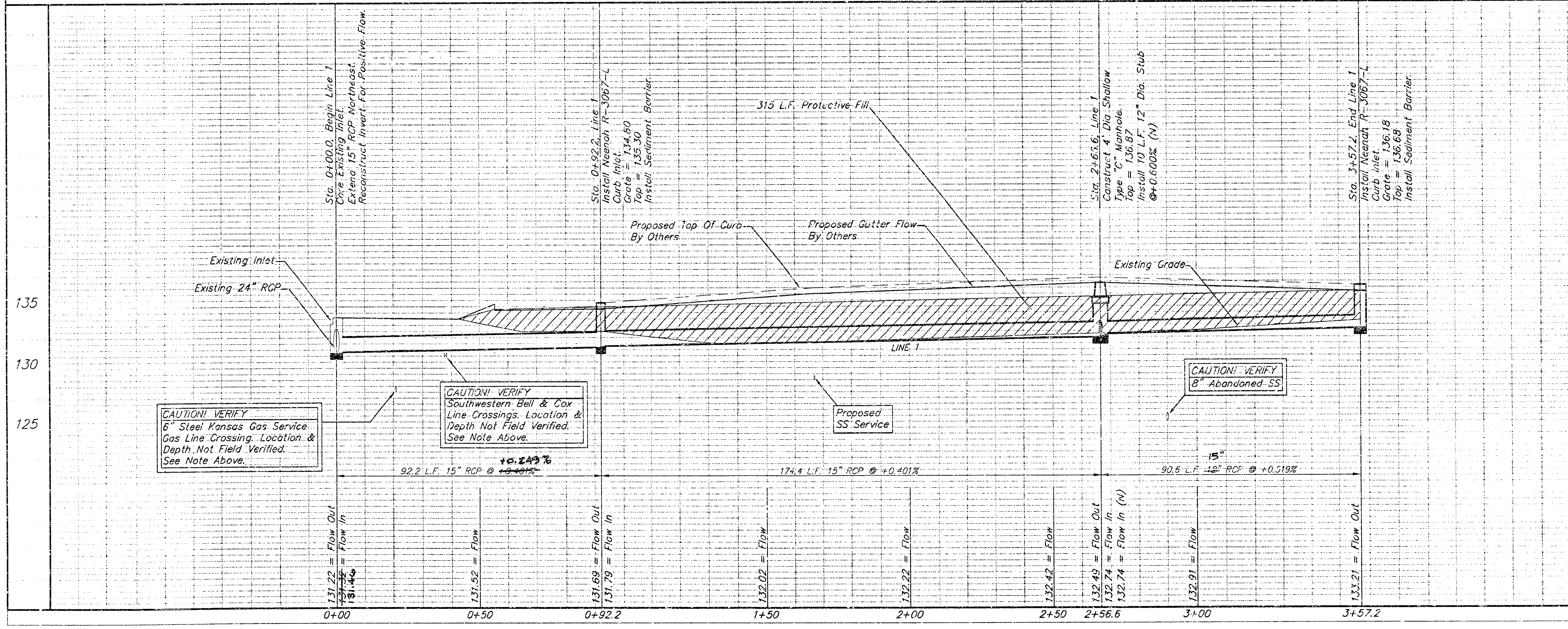
Sta. 0+00.0, Begin Line 1
Core Existing Inlet.
Extend 15" RCP Northeast.
Reconstruct Invert For Positive Flow.
Sta. 0+92.2, Line 1
Install Neenah R-3067-L
Curb Inlet.
Grate = 134.80
Top = 135.30
Install Sediment Barrier.
315 L.F. Protective Fill
Sta. 2+63.6, Line 1
Construct 4' Dia Shallow
Type "C" Manhole.
Top = 136.87
Install 10 L.F. 12" Dia. Stub
@+0.600% (N)
Sta. 3+57.2, End Line 1
Install Neenah R-3067-L
Curb Inlet.
Grate = 136.18
Top = 136.68
Install Sediment Barrier.
Proposed Top Of Curb
By Others
Proposed Gutter Flow
By Others
Existing Grade
Existing Inlet
Existing 24" RCP
LINE 1
135
130
125
Proposed
SS Service
92.2 L.F. 15" RCP @ ~~+0.401%~~ +0.249%
174.4 L.F. 15" RCP @ +0.401%
90.6 L.F. ~~12"~~ 15" RCP @ +0.519%
131.22 = Flow Out
~~131.32~~ 131.46 = Flow In
131.52 = Flow
131.69 = Flow Out
131.79 = Flow In
132.02 = Flow
132.22 = Flow
132.42 = Flow
132.49 = Flow Out
132.74 = Flow In
132.74 = Flow In (N)
132.91 = Flow
133.21 = Flow Out
0+00
0+50
0+92.2
1+50
2+00
2+50
2+56.6
3+00
3+57.2

CAUTION! VERIFY
6" Steel Kansas Gas Service
Gas Line Crossing. Location &
Depth Not Field Verified.
See Note Above.

CAUTION! VERIFY
Southwestern Bell & Cox
Line Crossings. Location &
Depth Not Field Verified.
See Note Above.

CAUTION! VERIFY
8" Abandoned SS

LEE M. ULLOM
17034
4-1-04

REVISED 3/25/04
REVISED 4/1/04

STORM WATER SEWER TO SERVE
QUIKTRIP #315
KELLOGG & MAIZE

BAUGHMAN COMPANY P.A.
ENGINEERING, SURVEYING, & PLANNING
316-262-7271 • 315 ELLIS • WICHITA, KANSAS 67211

PROJECT NUMBER	SHEET
1090 PPS (607861)	2R OF 6

DESIGN	DRAWN	APPROVED	DATE	SCALE
LU	LU	LU	4/04	NOTED

00-08-E791 Sws-1R2 OT 8 Revisions

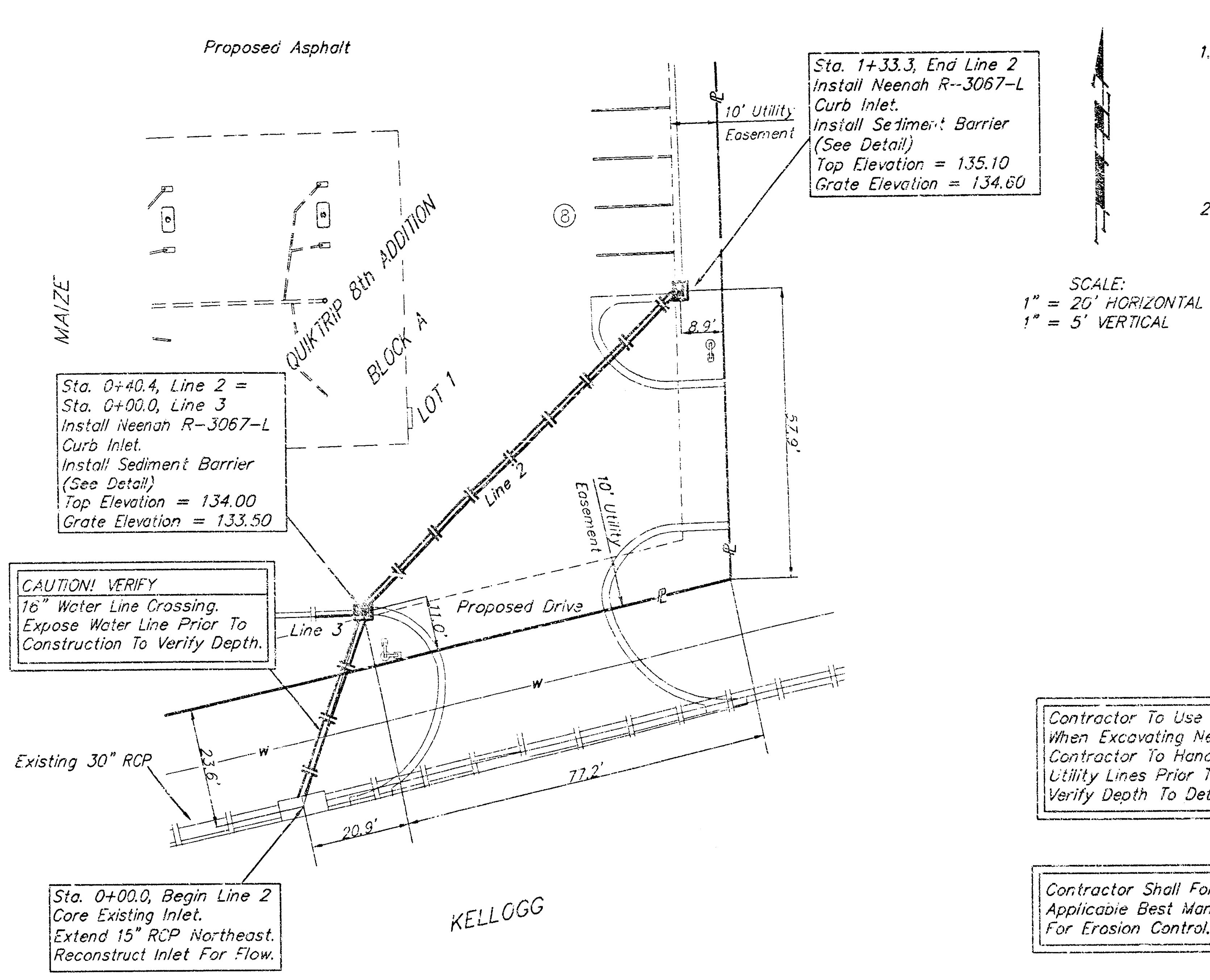
Proposed Asphalt
Sta. 1+33.3, End Line 2
Install Neenah R-3067-L
Curb Inlet.
Install Sediment Barrier
(See Detail)
Top Elevation = 135.10
Grate Elevation = 134.60
10' Utility Easement
MAIZE
QUIKTRIP 8th ADDITION
BLOCK A
LOT 1
Sta. 0+40.4, Line 2 =
Sta. 0+00.0, Line 3
Install Neenah R-3067-L
Curb Inlet.
Install Sediment Barrier
(See Detail)
Top Elevation = 134.00
Grate Elevation = 133.50
CAUTION! VERIFY
16" Water Line Crossing.
Expose Water Line Prior To
Construction To Verify Depth.
Line 2
Line 3
8.9'
57.9'
10' Utility Easement
Proposed Drive
Existing 30" RCP
23.6'
20.9'
77.2'
Sta. 0+00.0, Begin Line 2
Core Existing Inlet.
Extend 15" RCP Northeast.
Reconstruct Inlet For Flow.
KELLOGG
SCALE:
1" = 20' HORIZONTAL
1" = 5' VERTICAL

BENCHMARKS:

1. Maize Rd & McCormick (Hidden Valley)
City of Wichita Bench Mark. 0.5 miles south of Maple.
NE corner RCB over Cowskin, south of Hidden Valley Estates.

Elevation: 131.53 City Datum

2. Railroad spike in power pole east side
of Maize Road approximately 256 feet
south of center line of Kinger 12.5 feet
east and 14.5 feet north of inlet.

Elevation: 134.30 City Datum

Contractor To Use Extreme Caution
When Excavating Near Utility Lines
Contractor To Hand Dig To Expose All
Utility Lines Prior To Storm Sewer Installation.
Verify Depth To Determine Conflict If Any

Contractor Shall Follow All
Applicable Best Management Practices (BMP)
For Erosion Control. See Sheet 5

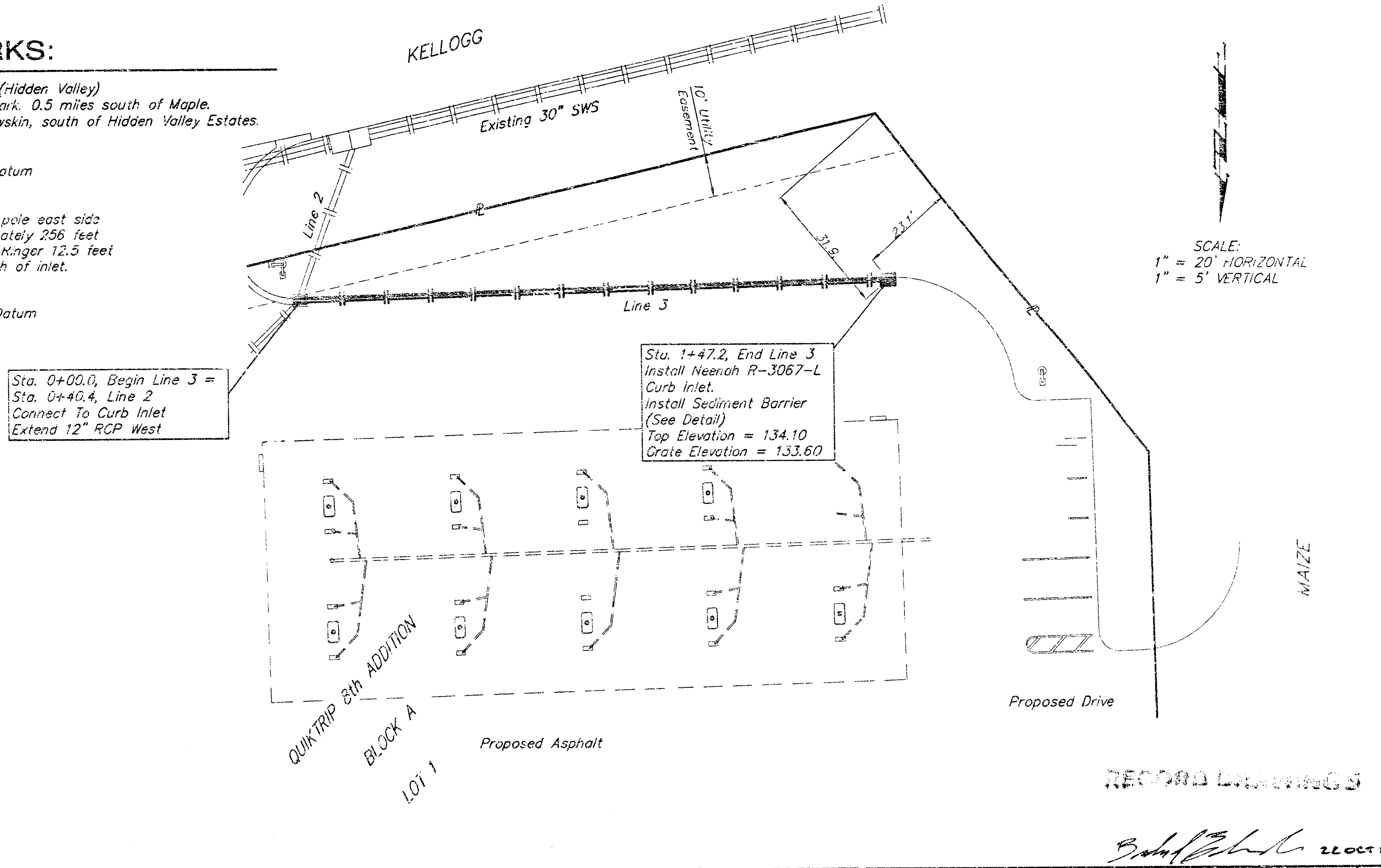
KELLOGG
Existing 30" SWS
10' Utility Easement
Line 2
Line 3
31.6'
23.1'
Sta. 0+00.0, Begin Line 3 =
Sta. 0+40.4, Line 2
Connect To Curb Inlet
Extend 12" RCP West
Sta. 1+47.2, End Line 3
Install Neenah R-3067-L
Curb Inlet.
Install Sediment Barrier
(See Detail)
Top Elevation = 134.10
Grate Elevation = 133.60
SCALE:
1" = 20' HORIZONTAL
1" = 5' VERTICAL
MAIZE
QUIKTRIP 8th ADDITION
BLOCK A
LOT 1
Proposed Asphalt
Proposed Drive
RECORD DRAWINGS

22 OCT 2004

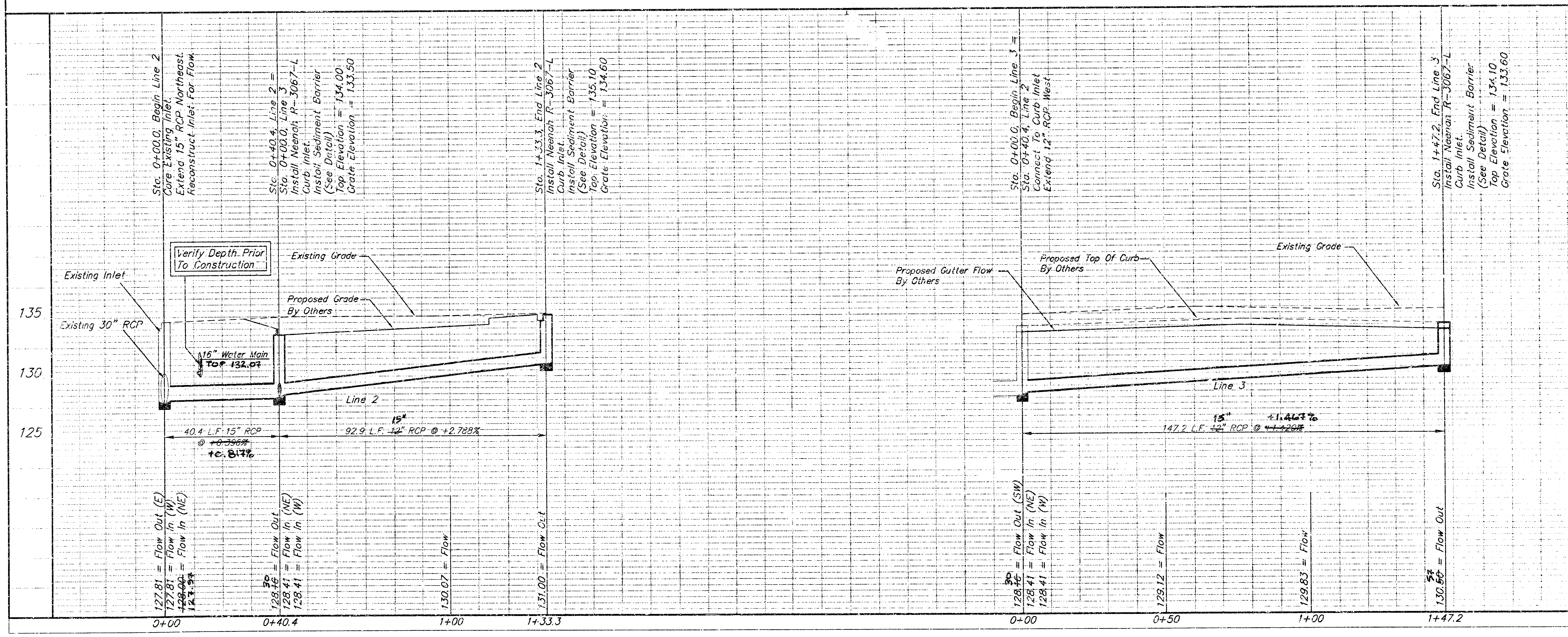
Sta. 0+00.0, Begin Line 2
Core Existing Inlet.
Extend 15" RCP Northeast.
Reconstruct Inlet For Flow.
Sta. 0+40.4, Line 2 =
Sta. 0+00.0, Line 3
Install Neenah R-3067-L
Curb Inlet.
Install Sediment Barrier
(See Detail)
Top Elevation = 134.00
Grate Elevation = 133.50
Sta. 1+33.3, End Line 2
Install Neenah R-3067-L
Curb Inlet.
Install Sediment Barrier
(See Detail)
Top Elevation = 135.10
Grate Elevation = 134.60
Sta. 0+00.0, Begin Line 3 =
Sta. 0+40.4, Line 2
Connect To Curb Inlet
Extend 12" RCP West
Sta. 1+47.2, End Line 3
Install Neenah R-3067-L
Curb Inlet.
Install Sediment Barrier
(See Detail)
Top Elevation = 134.10
Grate Elevation = 133.60
Verify Depth Prior To Construction
Existing Grade
Existing Inlet
Proposed Grade By Others
Existing 30" RCP
16" Water Main
TOP 132.07
Line 2
Proposed Gutter Flow By Others
Proposed Top Of Curb By Others
Existing Grade
Line 3
135
130
125
40.4 L.F. 15" RCP
@ ~~+0.396%~~ +0.817%
15"
92.9 L.F. ~~12"~~ RCP @ +2.788%
15" +1.467%
147.2 L.F. ~~12"~~ RCP @ ~~+1.429%~~
127.81 = Flow Out (E)
127.81 = Flow In (W)
~~128.00~~ 127.97 = Flow In (NE)
~~128.16~~ 30 = Flow Out
128.41 = Flow In (NE)
128.41 = Flow In (W)
130.07 = Flow
131.00 = Flow Out
~~128.16~~ 30 = Flow Out (SW)
128.41 = Flow In (NE)
128.41 = Flow In (W)
129.12 = Flow
129.83 = Flow
~~130.50~~ 57 = Flow Out
0+00
0+40.4
1+00
1+33.3
0+00
0+50
1+00
1+47.2

135
130
125

LEE M. ULLUM
17034
3-26-04
KANSAS

REVISED 3/26/04

STORM WATER SEWER TO SERVE
QUIKTRIP #315
KELLOGG & MAIZE

BAUGHMAN COMPANY P.A.
ENGINEERING, SURVEYING, & PLANNING
316-262-7271 * 315 ELLIS * WICHITA, KANSAS 67211

PROJECT NUMBER				SHEET
1090 PPS (607861)				3R OF 6
DESIGN LU	DRAWN LU	APPROVED LU	DATE 3/04	SCALE NOTED

QT 8 Revisions\Sws-2R2 00-08-E791

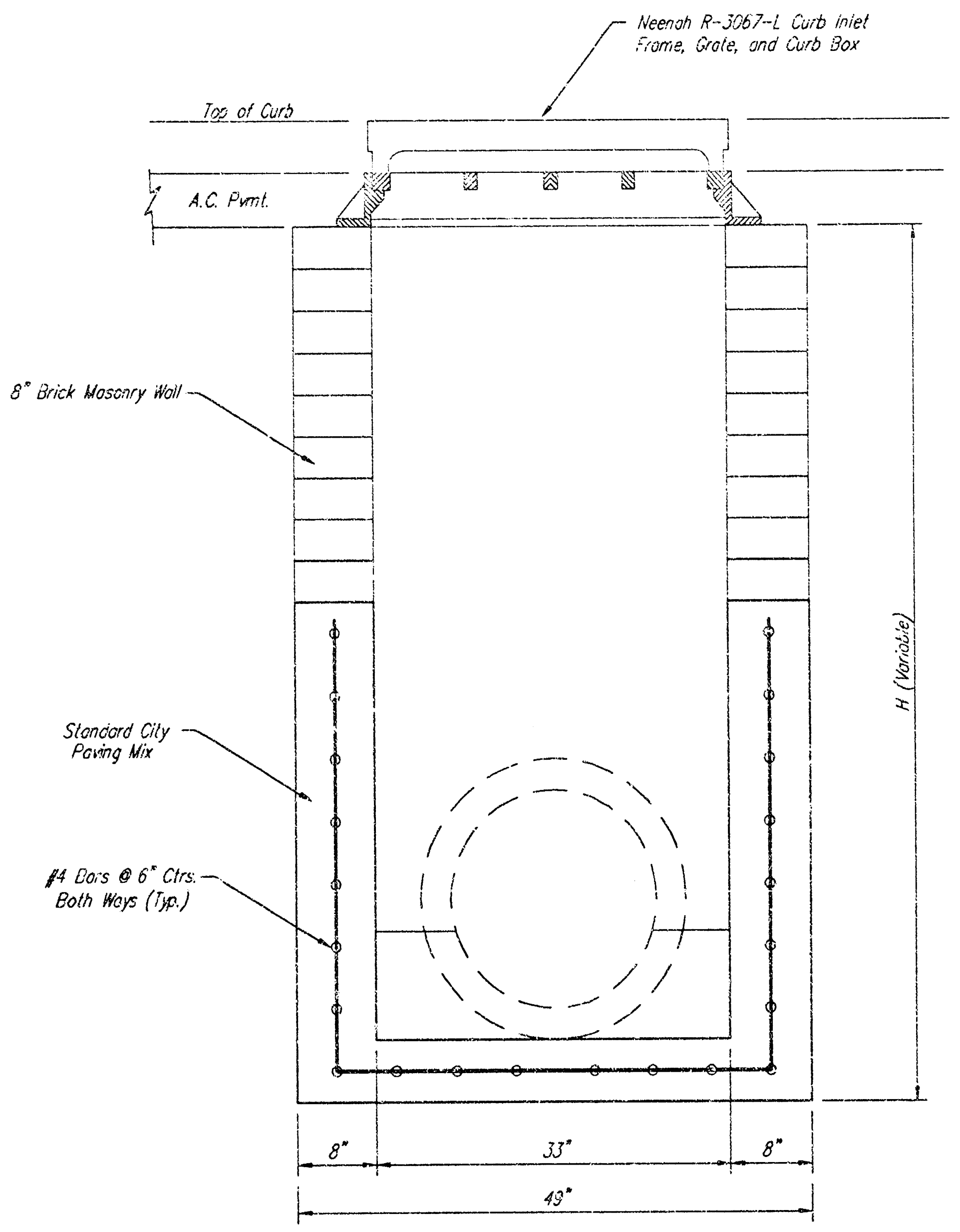
Neenah R-3067-L Curb Inlet Frame, Grate, and Curb Box
Top of Curb
A.C. Pvmt.
8" Brick Masonry Wall
Standard City Paving Mix
#4 Bars @ 6" Ctrs. Both Ways (Typ.)
H (Variable)
8"
33"
8"
49"

FRONT VIEW

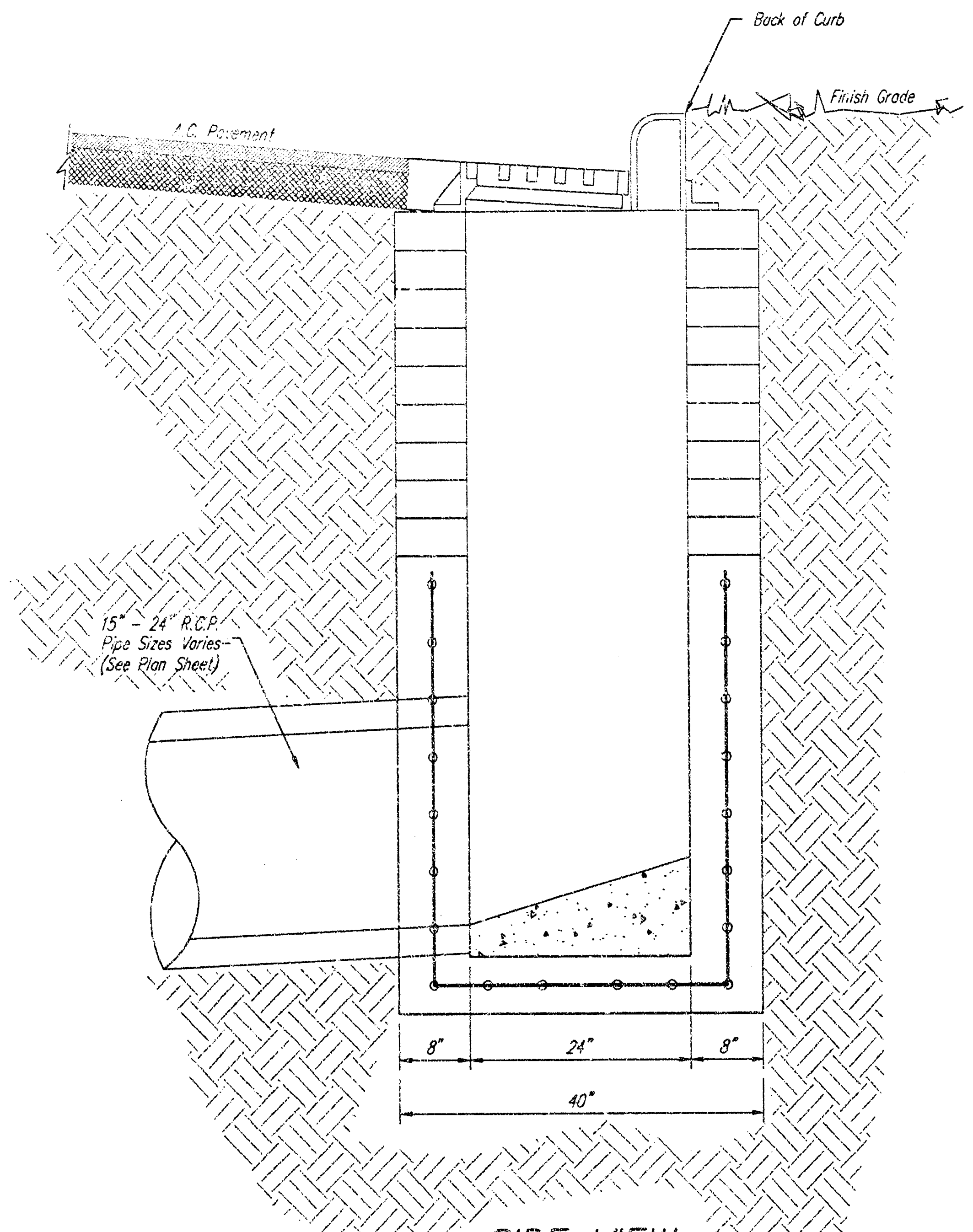
Back of Curb
Finish Grade
A.C. Pavement
15" - 24" R.C.P. Pipe Sizes Varies (See Plan Sheet)
8"
24"
8"
40"

SIDE VIEW

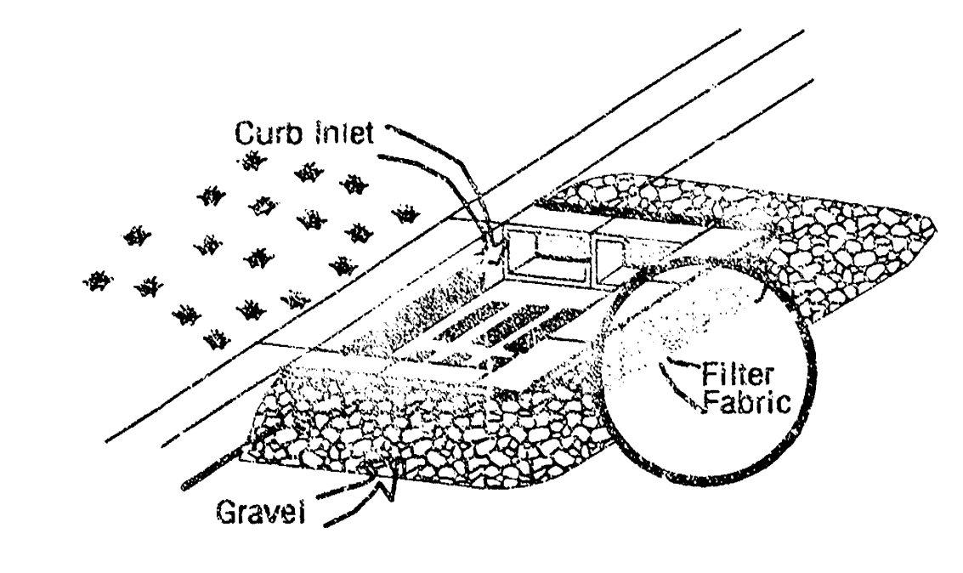
Curb Inlet
Filter Fabric
Gravel

NOTES:

Frequent maintenance is required to remove sediment deposits and buildup.

Wrap filter fabric around all CMU block and backfill with 2"–3" gravel rock to allow sediment deposits.

DO NOT cover inlet or grate with filter fabric.

CURB INLET W/GRATE

SEDIMENT BARRIER DETAIL

GENERAL NOTES:

Contractor shall have the option of constructing 8" brick masonry walls between the concrete inlet base and frame on this inlet when the height (H) is 7 feet or less.

The inlet invert shall be shaped with 8 sack sand mix concrete to create flow channels and to increase the hydraulic efficiency such that the inlet shall be self cleaning between all inlet and/or outlet pipes.

The end of all pipes installed in this inlet shall be cut off flush with the inside face of the inlet wall.

SPECIAL CURB INLET

w/ Neenah R-3067-L Curb Inlet Frame, Grate, Curb Box

BAUGHMAN COMPANY P.A.
ENGINEERING, SURVEYING, & PLANNING
316-262-7271 * 315 ELLIS * WICHITA, KANSAS 67211

PROJECT NUMBER
1090 PPS (607861)

SHEET 4 OF 6

DESIGN	DRAWN	APPROVED	DATE	SCALE
Staff	Staff	LU	1/03	NONE

qt3\specialcurbinlet 00-08-E791

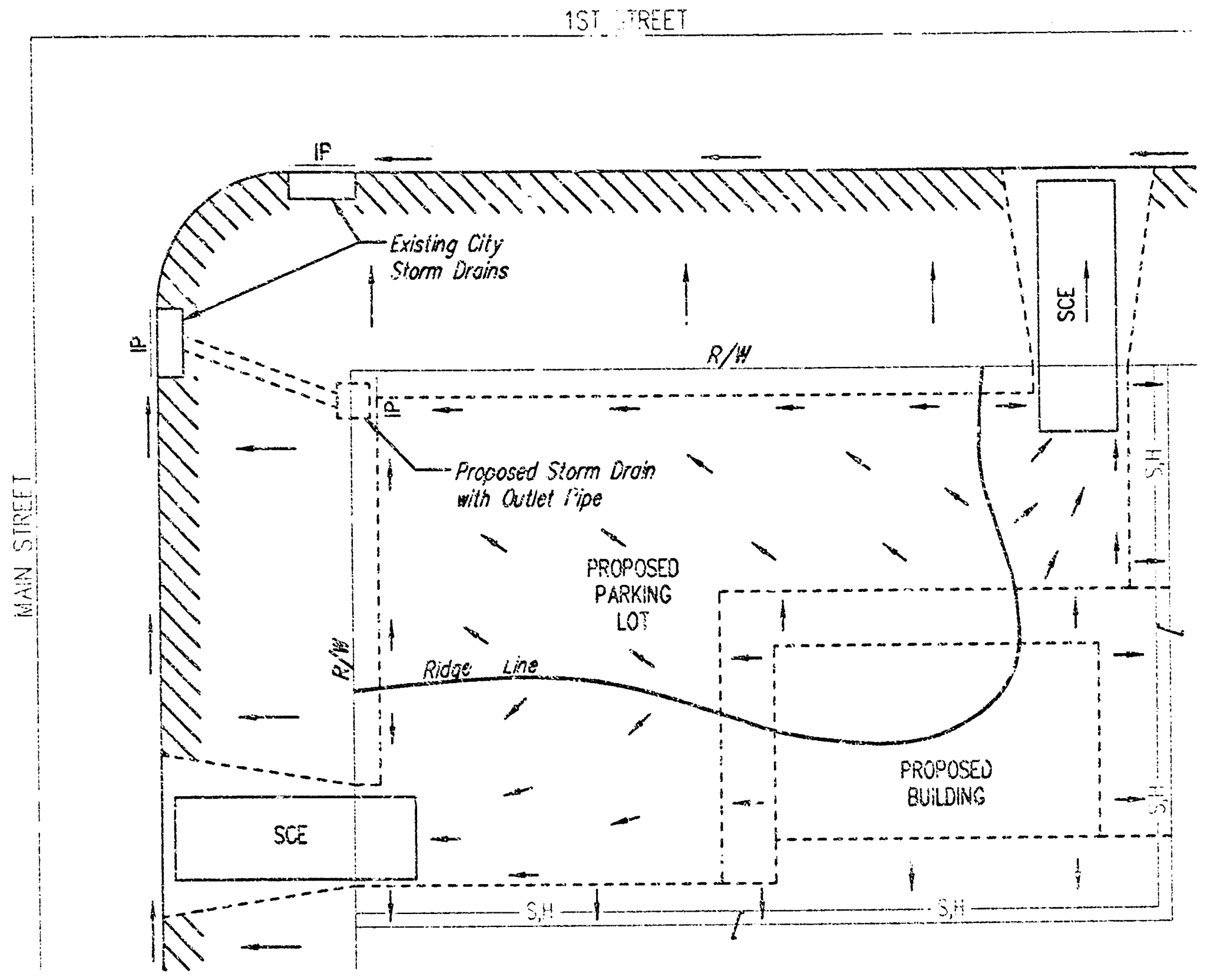
1ST STREET
MAIN STREET
IP
Existing City Storm Drains
R/W
SCE
Proposed Storm Drain with Outlet Pipe
PROPOSED PARKING LOT
Ridge Line
PROPOSED BUILDING
S,H

LEGEND

⟶	Flow Direction
IP	Inlet Protection – to be provided at all inlets subject to silt laden runoff.
– S,H –	Silt Fence or Hay Bale Barrier – to be installed along property lines where runoff from construction site can run onto other properties.
SCE	Stabilized Construction Entrance – to be used at all locations where vehicles or equipment enter or exit property.
▨	Back of Curb Protection – to be installed whenever curb is backfilled to less than 3 inches from top and disturbed earth exists adjacent thereto. (See City Standard Details.)

General Notes

1. This standard detail sheet is a part of your building permit. The BMP's shown on this sheet are considered minimum standards. Whenever sediment enters the streets, storm sewers, ditches, or ponds, contractor will install additional BMP's, as needed, to correct the problem.
2. Follow these general principals on all commercial building sides.
3. The soil erosion BMP's shown hereon must be in place at all times during construction until such time as the site is re-established with paving or grass.
4. Failure to install, protect, and maintain BMP's are violations of Section 16.32 of the City Code and will subject the contractor to the penalties provided therein. Included with your permit is an orange "notice" sign that must be posted on-site in a conspicuous place at all times during construction. This sign is provided to assist you in the maintenance of BMP'S.
5. Back of Curb Protection: Can include hay bale, silt fence, or Curlex barrier, as shown on City BMP standard details. This BMP must remain in place until the area between the curb and right-of-way line has been permanently stabilized.
6. The General Contractor is responsible for the installation and maintenance of all BMP's.
7. Should the site abut a lake, BMP's will be installed to prevent sediment from entering the lake.
8. Any mud inadvertently tracked onto any street will be cleaned up by the general contractor at the end of each day's work.

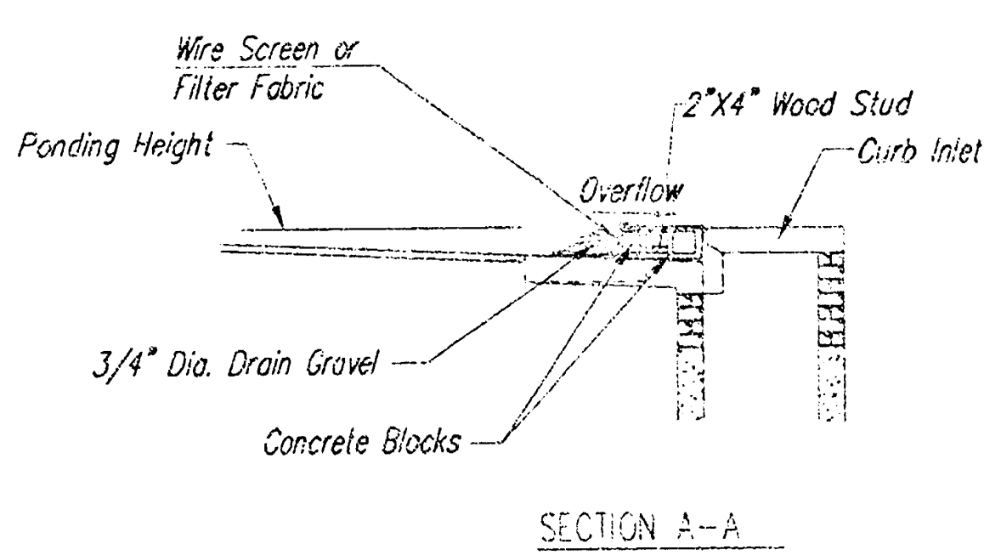
Wire Screen or Filter Fabric
2"X4" Wood Stud
Ponding Height
Overflow
Curb Inlet
3/4" Dia. Drain Gravel
Concrete Blocks

SECTION A–A

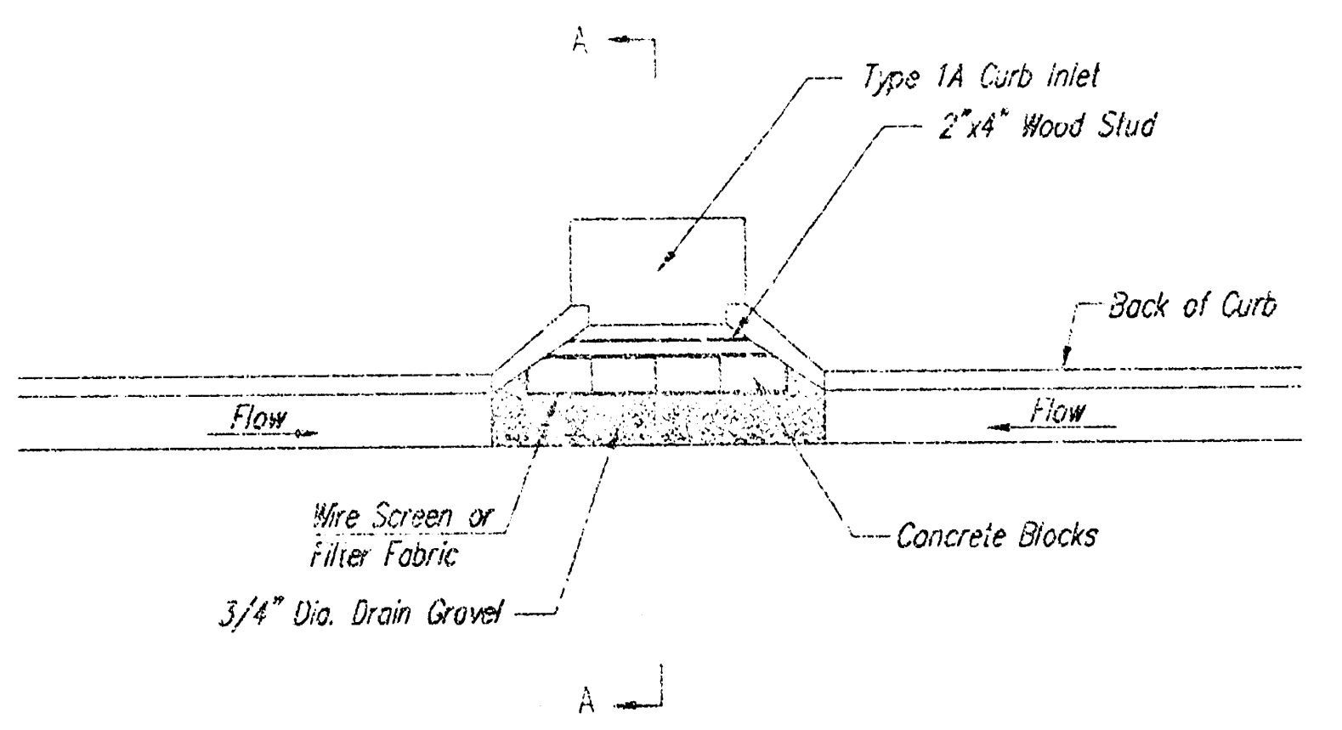
A
Type 1A Curb Inlet
2"x4" Wood Stud
Back of Curb
Flow
Flow
Wire Screen or Filter Fabric
Concrete Blocks
3/4" Dia. Drain Gravel
A

CURB INLET GRAVEL FILTERS

(INLET PROTECTION–RESIDENTIAL STREETS ONLY)

NOTE: Other types of curb inlet protection may be approved by the city so long as equal protection is provided.

A gravel inlet filter shall be installed at sump locations on residential streets. This type of protection is not to be used on arterial or collector streets at any time that it would pose an undue traffic hazard.

Instructions for Installing:

STEP 1: Place concrete blocks around the inlet as shown on drawing. Insert 2x4 board as shown.
STEP 2: Wrap 1/2" mesh wire screen around the concrete blocks.
STEP 3: Place 1" to 1-1/2" diameter rock around the blocks and wire screen. Be sure the rock extends down from the top of the concrete block.
STEP 4: To prevent damage to vehicles, signs warning drivers about the structures may be necessary. An alternative installation is the use of gravel bags supported by a 2"x4" board to prevent collapsing.

Use of rock with diameters smaller than 1" in the bag may result in clogging of pores and reduce the amount of water flowing into an inlet.

Maintenance:

All curb inlet gravel filters shall be inspected and repaired after each runoff event. Sediment deposits are to be removed once material is within 3 cm (3 inches) of the top of any block. Periodically, the gravel shall be raked to increase infiltration and filtering of runoff waters. Accumulated sediment is to be removed immediately from roads and streets.

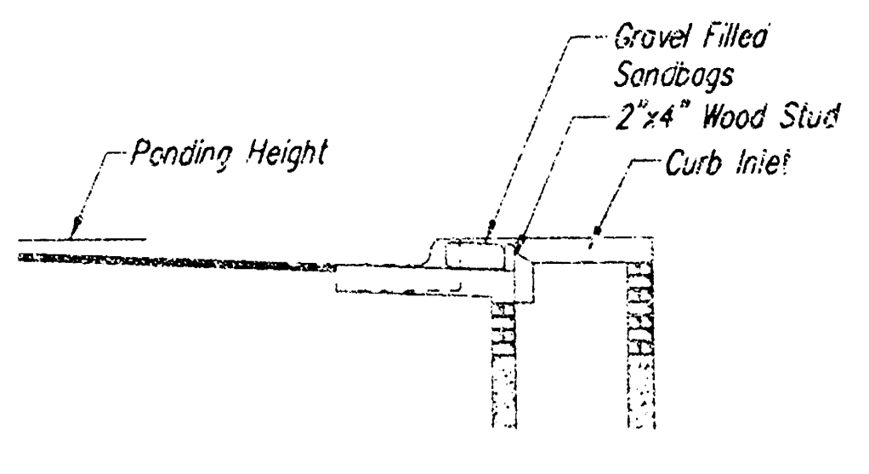
Gravel Filled Sandbags
2"x4" Wood Stud
Ponding Height
Curb Inlet

SECTION B–B

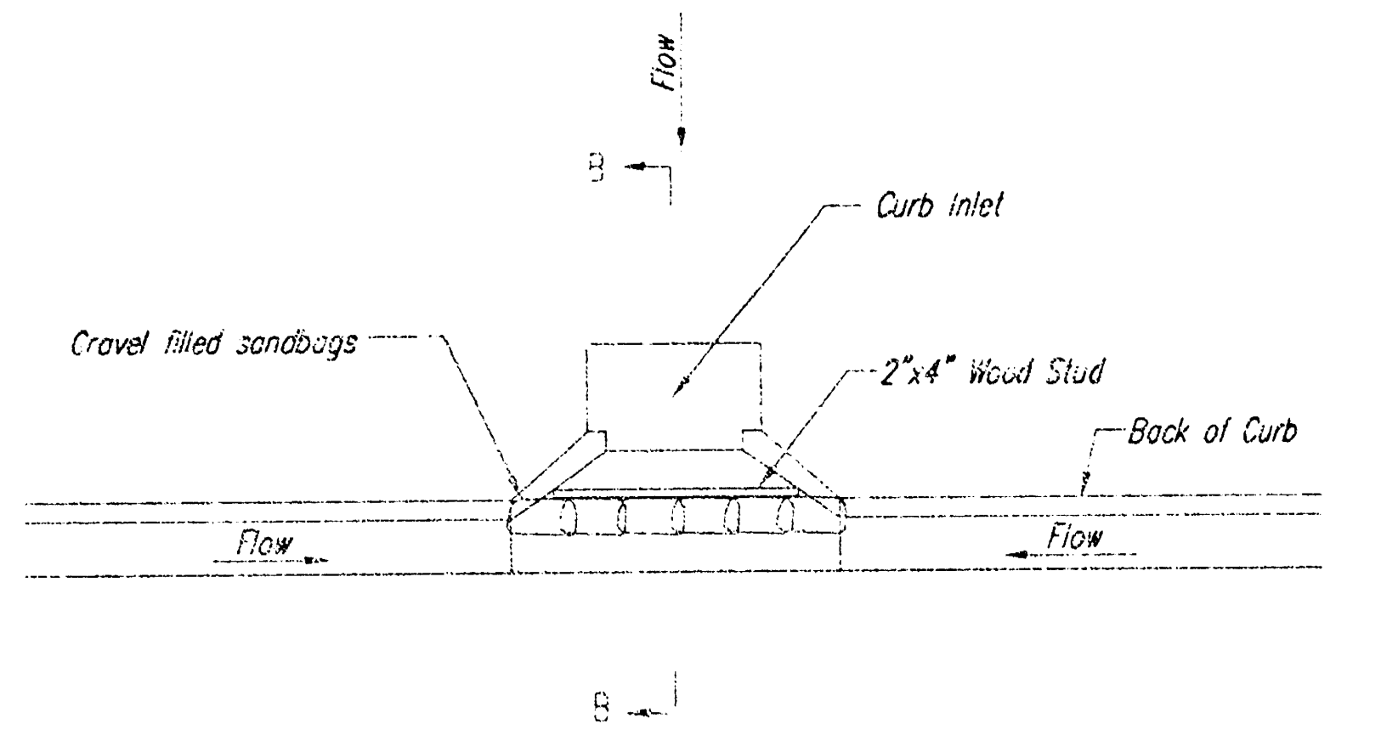
Flow
B
Curb Inlet
Gravel filled sandbags
2"x4" Wood Stud
Back of Curb
Flow
Flow
B

CURB INLET SANDBAG FILTERS

(INLET PROTECTION)

NOTE: Other types of curb inlet protection may be approved by the City so long as equal protection is provided.

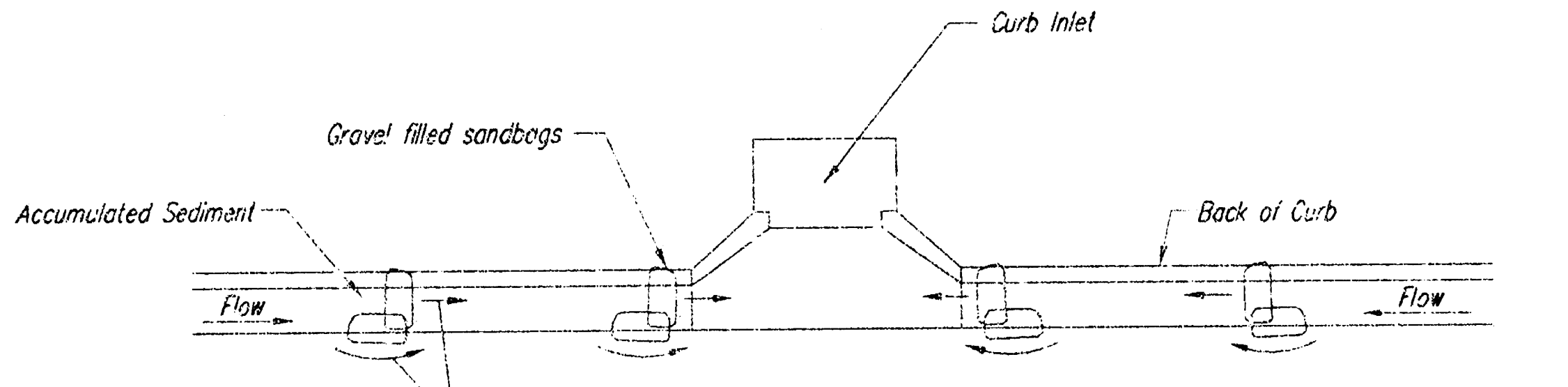
Curb Inlet
Gravel filled sandbags
Accumulated Sediment
Back of Curb
Flow
Flow
Overflow Paths

GRAVEL BAG CURB FILTER

(INLET PROTECTION)

NOTE: Place two or more sets of bags in a manner that results in maximum support. The flow line bag must be lower than top of curb.

CURB SEDIMENT TRAPS

When inlets are located on streets having a grade (i.e., sump conditions do not exist), installing gravel (or sand) bags in the gutter flow line to create small sediment traps can be considered. Gravel bags are recommended over sand bags to allow for drainage.

If the spacing between bags becomes too large, little sediment may be trapped. Spacing of bags should be completed using the table or graph that illustrates placement distances based upon street slope. When installed in the gutter, bag tops must be lower than the sidewalk.

Spacing:

Gravel bags are to be placed according to street grades using the following table or graph that appears below.

GRADE (%)	SPACING (FEET)
0.5	75
1.0	45
2.0	18
3.0	12
4.0	9
5.0	6

Maintenance:

Collected sediment shall be removed after every runoff event. Bags that are destroyed by vehicular traffic or through natural deterioration are to be immediately replaced.

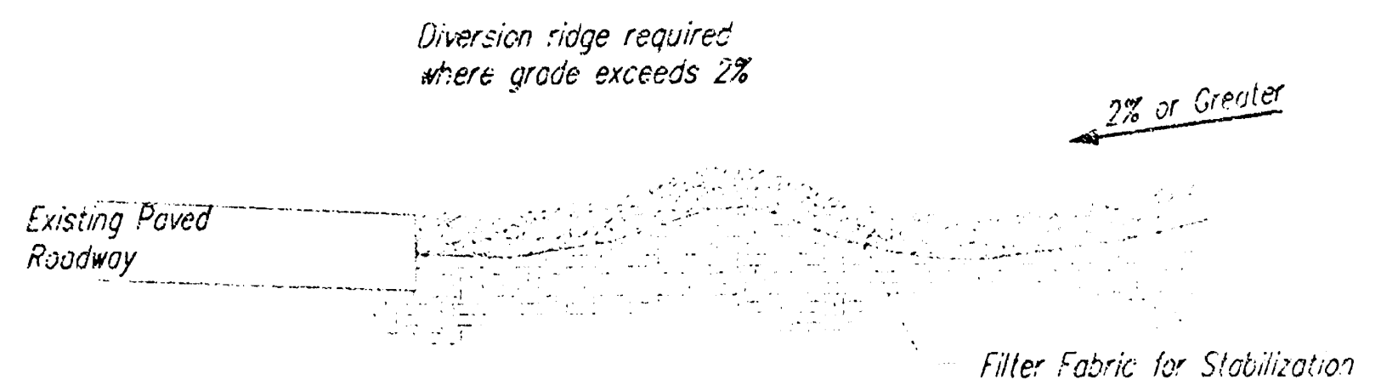
Diversion ridge required where grade exceeds 2%
2% or Greater
Existing Paved Roadway
Filter Fabric for Stabilization

SECTION C–C

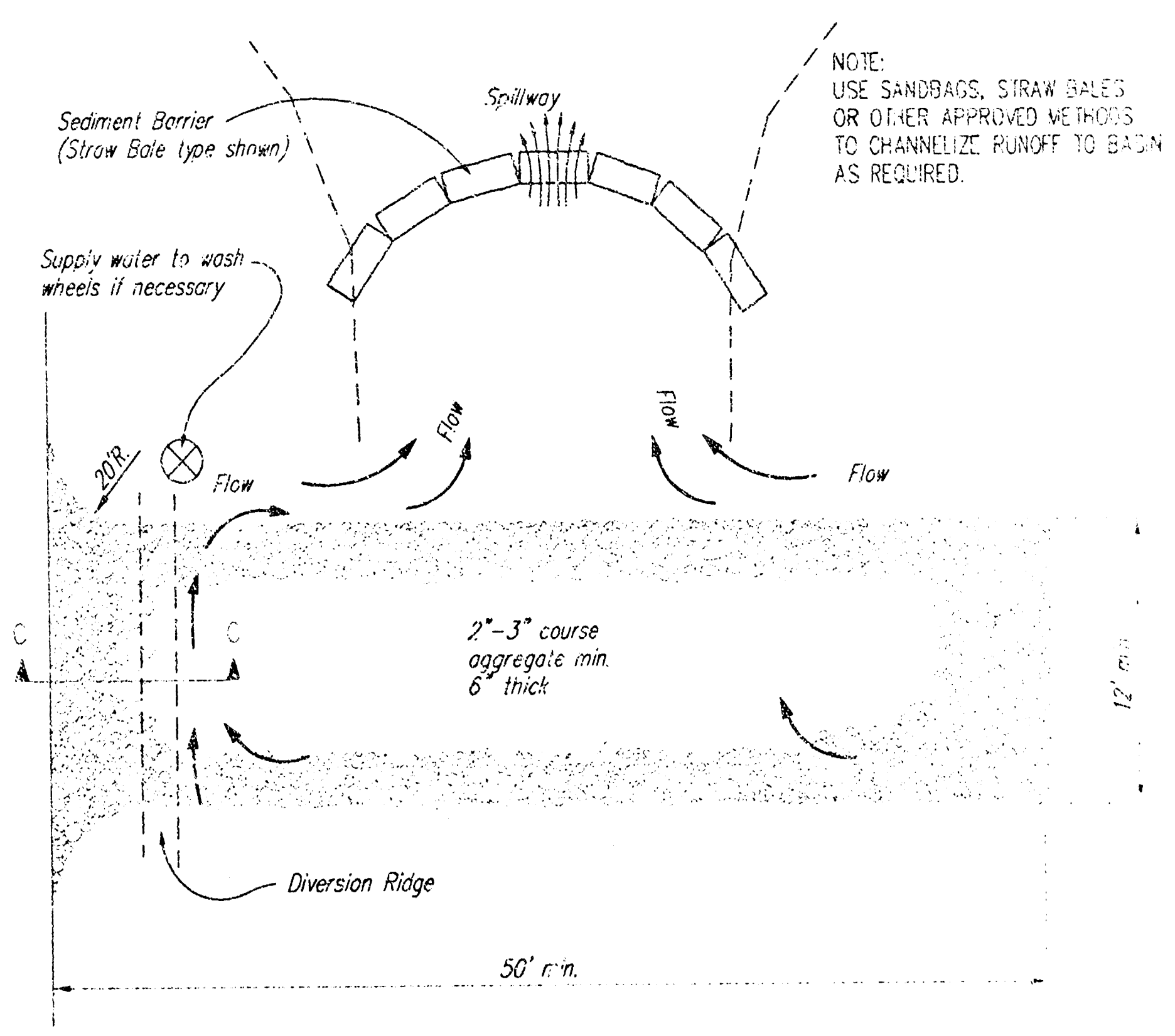
Sediment Barrier (Straw Bale type shown)
Spillway
Supply water to wash wheels if necessary
20'R.
Flow
Flow
Flow
Flow
C
C
2"–3" course aggregate min. 6" thick
12' min.
Diversion Ridge
Existing Paved Roadway
50' min.

NOTE:
USE SANDBAGS, STRAW BALES OR OTHER APPROVED METHODS TO CHANNELIZE RUNOFF TO BASIN AS REQUIRED.

STABILIZED CONSTRUCTION ENTRANCE

NOTES:

1. THE ENTRANCE SHALL BE MAINTAINED IN A CONDITION THAT WILL PREVENT TRACKING OR FLOWING OF SEDIMENT ONTO PUBLIC RIGHTS-OF-WAY. THIS MAY REQUIRE TOP DRESSING, REPAIR AND/OR CLEANOUT OF ANY MEASURES USED TO TRAP SEDIMENT.
2. WHEN NECESSARY, WHEELS SHALL BE CLEANED PRIOR TO ENTRANCE ONTO PUBLIC RIGHT-OF-WAY.
3. WHEN WASHING IS REQUIRED, IT SHALL BE DONE ON AN AREA STABILIZED WITH CRUSHED STONE THAT DRAINS INTO AN APPROVED SEDIMENT TRAP OR SEDIMENT BASIN, AS SHOWN ABOVE.
4. DRIVE ENTRANCES ONTO RESIDENTIAL LOTS WILL NOT BE REQUIRED TO HAVE THE SEDIMENT BARRIER SHOWN, BUT WHEEL WASHING MAY BE REQUIRED IF STABILIZED ENTRANCE IS NOT SUFFICIENT TO KEEP MUD FROM BEING TRACKED ONTO ADJACENT STREET. ENTRANCE SHALL EXTEND FROM BACK OF CURB TO DWELLING.

CITY OF
WICHITA

SOIL EROSION
BMP DETAILS

CHRISTOPHER M. CARRIER, P.E.
STORM WATER ENGINEER

PROJECT NUMBER	OCA NO.
1090 PPS (607861)	NA

DATE	
1/03	SHEET 5 OF 6

QUIKTRIP 8TH ADDITION
WICHITA, SEDGWICK COUNTY, KANSAS

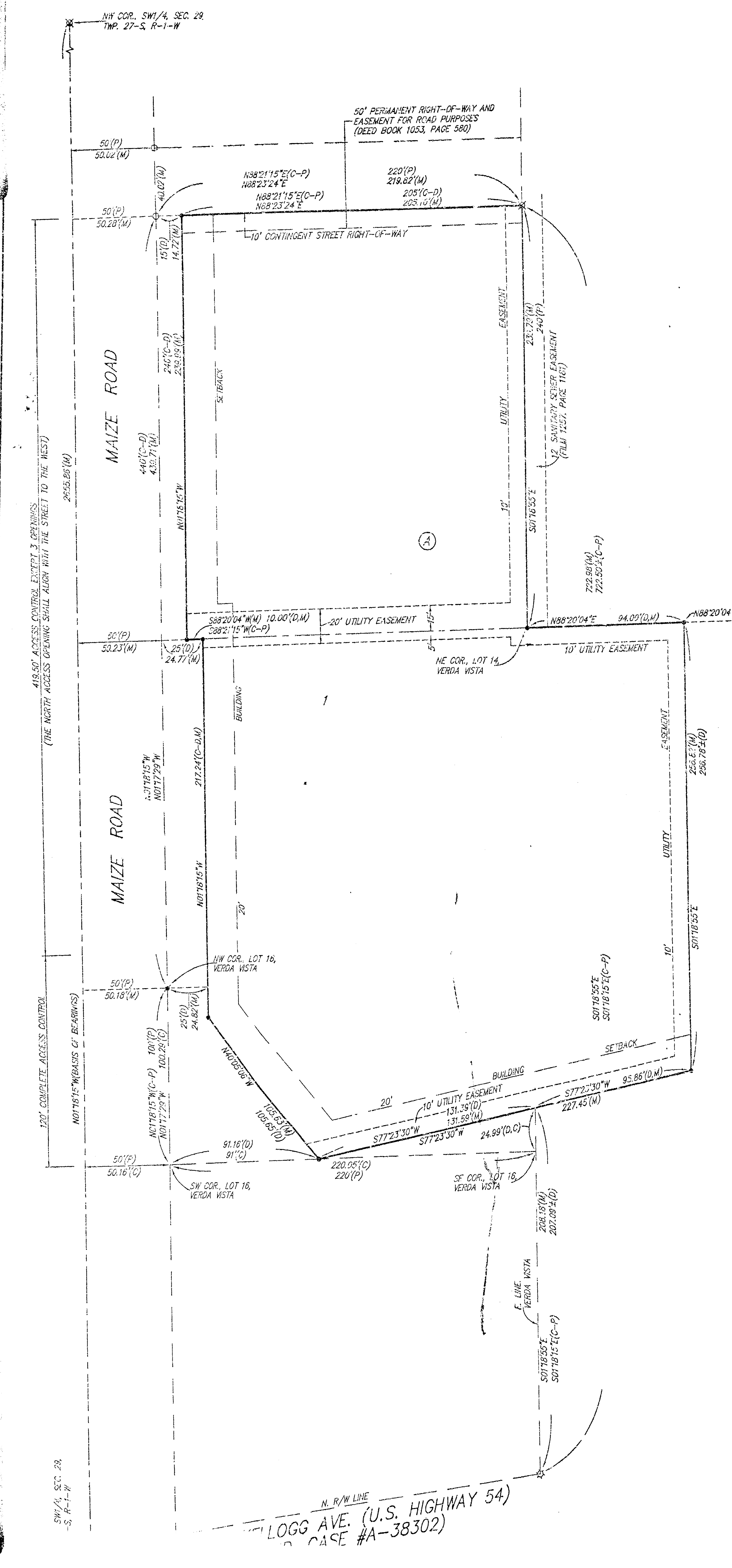
NW COR., SW1/4, SEC. 29, TWP. 27-S, R-1-W
50' PERMANENT RIGHT-OF-WAY AND EASEMENT FOR ROAD PURPOSES (DEED BOOK 1053, PAGE 580)
50'(P) 50.02'(M)
50'(P) 50.28'(M)
40.02'(M)
N88°21'15"E(C-P) N88°23'24"E
220'(P) 219.82'(M)
205'(C-D) 205.10'(M)
15'(D) 14.72'(M)
10' CONTINGENT STREET RIGHT-OF-WAY
MAIZE ROAD
240'(C-D) 239.99'(M)
440'(C-D) 439.71'(M)
2655.86'(M)
419.50' ACCESS CONTROL EXCEPT 3 OPENINGS (THE NORTH ACCESS OPENING SHALL ALIGN WITH THE STREET TO THE WEST)
N01°18'15"W
SETBACK
UTILITY EASEMENT
10'
S01°18'55"E
231.79'(M) 240'(P)
12' SANITARY SEWER EASEMENT (FILM 1257, PAGE 1181)
A
722.98'(M) 722.50'±(C-P)
S88°20'04"W(M) 10.00'(D,M)
S88°21'15"W(C-P)
20' UTILITY EASEMENT
15'
5'
N88°20'04"E 94.00'(D,M)
N88°20'04"E 196.00'(D) 195.95'(M)
50'(P) 50.23'(M)
25'(D) 24.77'(M)
NE COR., LOT 14, VERDA VISTA
10' UTILITY EASEMENT
BUILDING
1
217.24'(C-D,M)
N01°18'15"W N01°17'29"W
256.82'(M) 256.78'±(D)
20'
NW COR., LOT 16, VERDA VISTA
50'(P) 50.18'(M)
25'(D) 24.82'(M)
120' COMPLETE ACCESS CONTROL
N01°18'15"W(BASIS OF BEARINGS)
N01°18'15"W(C-P) N01°17'29"W
100'(P) 100.29'(C)
N40°05'00"W
105.63'(M) 105.65'(D)
91.16'(D) 91'(C)
50'(P) 50.16'(C)
SW COR., LOT 16, VERDA VISTA
220.95'(C) 220'(P)
S77°23'30"W
131.39'(D) 131.59'(M)
S77°23'30"W 227.45'(M)
95.86'(D,M)
24.99'(D,C)
BUILDING SETBACK
S01°18'55"E S01°18'15"E(C-P)
SE COR., LOT 16, VERDA VISTA
208.18'(M) 207.09'±(D)
E. LINE VERDA VISTA
S01°18'55"E S01°18'15"E(C-P)
N. R/W LINE
KELLOGG AVE. (U.S. HIGHWAY 54)
CASE #A-38302)
SW1/4, SEC. 29, -S, R-1-W

State of Kansas)
Sedgwick County) SS

We, Baughman Company, P.A., Surveyors in aforesaid county and state do hereby certify that we have surveyed and platted "QUIKTRIP 8TH ADDITION", Wichita, Sedgwick County, Kansas and that the accompanying plat is a true and correct exhibit of the property surveyed, described as the south 40.00 feet of Lot 11, except the west 15.00 feet thereof for street, TOGETHER with Lots 12 and 13, except the west 15.00 feet thereof for street, TOGETHER with Lots 14 and 15, except the west 25.00 feet thereof, all in Verda Vista, Sedgwick County, Kansas, TOGETHER with Lot 16 in said Verda Vista, except that part of said Lot 16 described as follows: Beginning at the NW corner of said Lot 16; thence east along the north line of said Lot 16, 25.00 feet; thence south parallel with the west line of said Lot 16, 17.24 feet; thence southeasterly 105.65 feet to a point on the south line of said Lot 16 and 91.16 feet east of the SW corner of said Lot 16; thence northeasterly 131.39 feet to a point on the east line of said Lot 16; thence south along the east line of said Lot 16, 24.99 feet to the SE corner of said Lot 16; thence west along the south line of said Lot 16 to the SW corner of said Lot 16; thence north to the point of beginning, TOGETHER with a tract in the SW1/4 of Sec. 29, Twp. 27-S, R-1-W of the 6th P.M., Sedgwick County, Kansas described as follows: Commencing at the SE corner of Lot 18 in said Verda Vista, said point being on the north right-of-way line of U.S. Highway 54 as condemned in Case No. A-38302; thence on an assumed bearing of N01°18'15"W along the east line of said Verda Vista, 207.09 feet, more or less, to a point 24.99 feet north of the SE corner of Lot 16 in said Verda Vista, and for a point of beginning; thence N77°23'30"E, 95.86 feet, more or less, to a point 94.00 feet normally distant east of the east line of said Verda Vista; thence N01°18'15"W parallel with the east line of said Verda Vista, 256.78 feet, more or less, to the intersection with the north line of Lot 14 in said Verda Vista, as extended east; thence S88°20'04"W along said extended north line, 94.00 feet to the NE corner of said Lot 14; thence S01°18'15"E along the east line of said Verda Vista to the point of beginning.

Existing easements and dedications being vacated by virtue of K.S.A. 12-512(b).

All being situated in the SW1/4 of Sec. 29, Twp. 27-S, R-1-W of the 6th P.M., Sedgwick County, Kansas.

Baughman Company, P.A.

_______________, Surveyor
Michael C. Conrey

LS-971 1-8-2001

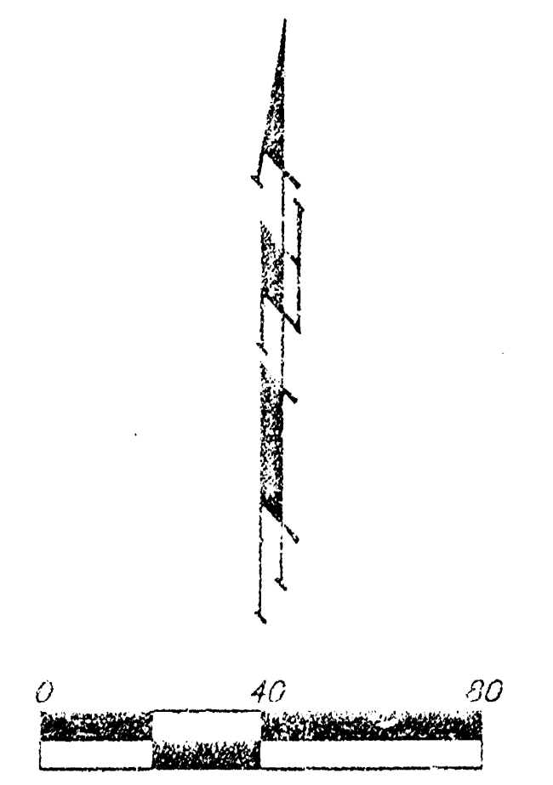

(M) = MEASURED
(P) = PLATTED
(D) = DESCRIBED
(C) = CALCULATED
(C-P) = CALCULATED PER PLATTED INFO.
(C-D) = CALCULATED PER DESCRIBED INFO.

⌀ – #4 REBAR W/ "BAUGHMAN" CAP (FOUND)
• = #4 REBAR W/ "BAUGHMAN" CAP (SET)
◉ = #3 REBAR (FOUND)
⊠ = 3/4" IRON (FOUND)
○ = 1/2" IRON (FOUND)
✧ = CROSS (FOUND)

NOTE:
A DRAINAGE PLAN HAS BEEN DEVELOPED FOR THIS SUBDIVISION AND IS ON FILE WITH THE CITY OF WICHITA, KANSAS. DRAINAGE INTENT SHALL REMAIN AS DEPICTED OR AS MODIFIED WITH THE APPROVAL OF THE CITY ENGINEER OF THE CITY OF WICHITA, KANSAS. NO OBSTRUCTIONS WHICH IMPEDE THE FLOW OF THIS DRAINAGE PLAN SHALL BE ALLOWED.

Know all men by these presents that we, the undersigned, have caused the land in the surveyors certificate to be platted into a Lot and a Block, to be known as "QUIKTRIP 8TH ADDITION", Wichita, Sedgwick County, Kansas. The utility easements are hereby granted as indicated for the construction and maintenance of all public utilities. The 10 foot contingent street right-of-way along the north line of Lot 1, Block A, shall become effective in the event that the City of Wichita, Kansas determines a need for the right-of-way for any street related purposes. This contingent street right-of-way shall be a covenant running with the land and shall be binding on all heirs and subsequent owners of all parts of said property covered by said right-of-way. All abutters rights of access to or from Maize Road over and across the west line of Lot 1, Block A, are hereby granted to the City of Wichita, Kansas provided, however, that said Lot 1, Block A shall have access to said Maize Road at three locations over all except the south 120 feet of the west line of said Lot 1, Block A, all as shall be determined by the City Engineer of the City of Wichita, Kansas. The north access opening shall align with the street to the west.

____
David Bayouth

Bledsoe Enterprises, Inc.

_______________, President
Harry D. Bledsoe

____
Harry D. Bledsoe, as attorney-in-fact for:
Mary C. Bollinger a/k/a Mary L. Bollinger
and David Bollinger,
Rae Ann Angelo and Louis M. Angelo,
Vicki L. Braun,
Donna Hughes Floyd f/k/a Donna L. Guinn
and Steven Floyd,
Patricia J. Tasker and Darrell Tasker,
Dale James Schultz,
Thomas A. Bledsoe, and
Gregory J. Bledsoe and Cathy Kaye Bledsoe

State of Kansas)
Sedgwick County) SS

Be it remembered, that on this 23RD day of JANUARY, 2001, before me, the undersigned, a Notary Public, in and for the County and State aforesaid, came David Bayouth, a single person, personally known to me to be the same person who executed the within instrument of writing and such person duly acknowledged the execution of the same.

In testimony whereof, I have hereunto set my hand and affixed my official seal the day and year above written.

JUDITH M. TERHUNE
Notary Public - State of Kansas
My Appt. Expires 11-7-2001

_______________, Notary Public
JUDITH M. TERHUNE

My App't. Exp. 11-7-2001

State of Kansas)
Sedgwick County) SS

Be it remembered, that on this 23RD day of JANUARY, 2001, before me, the undersigned, a Notary Public, in and for the County and State aforesaid, came Harry D. Bledsoe, as President of Bledsoe Enterprises, Inc., a Kansas Corporation, personally known to me to be the same person who executed the within instrument of writing and such person duly acknowledged the execution of the same, for and on behalf and as the act and deed of said corporation.

In testimony whereof, I have hereunto set my hand and affixed my official seal the day and year above written.

JUDITH M. TERHUNE
Notary Public - State of Kansas
My Appt. Expires 11-7-2001

_______________, Notary Public
JUDITH M. TERHUNE

My App't. Exp. 11-7-2001

State of Kansas)
Sedgwick County) SS

Be it remembered, that on this 23RD day of JANUARY, 2001, before me, the undersigned, a Notary Public, in and for the County and State aforesaid, came Harry D. Bledsoe, as attorney-in-fact for Mary C. Bollinger a/k/a Mary L. Bollinger and David Bollinger, wife and husband, Rae Ann Angelo and Louis M. Angelo, wife and husband, Vicki L. Braun, a single person, Donna Hughes Floyd f/k/a Donna L. Guinn and Steven Floyd, wife and husband, Patricia J. Tasker and Darrell Tasker, wife and husband, Dale James Schultz, a single person, Thomas A. Bledsoe, a single person, and Gregory J. Bledsoe and Cathy Kaye Bledsoe, husband and wife, personally known to me to be the same person who executed the within instrument of writing and such person duly acknowledged the execution of the same.

In testimony whereof, I have hereunto set my hand and affixed my official seal the day and year above written.

JUDITH M. TERHUNE
Notary Public - State of Kansas

This plat of "QUIKTRIP 8TH ADDITION", Wichita, Sedgwick County, Kansas has been submitted to and approved by the Wichita-Sedgwick County Metropolitan Area Planning Commission, Wichita, Kansas.

Dated this 7th day of December, 2000.
Wichita-Sedgwick County Metropolitan Area Planning Commission

_______________, Chairman
Christopher S. Carraher

_______________, Secretary
Marvin S. Krout

This plat approved and all dedications shown hereon accepted by the City Council of the City of Wichita, Kansas, this 13th day of February, 2001.

_______________, Mayor
Bob Knight

_______________, City Clerk
Pat Burnett

Reviewed in accordance with K.S.A. 58-2005 on this 25th day of January, 2001.

____
Tricia L. Robello, L.S. #1246
Deputy County Surveyor
Sedgwick County, Kansas

Entered on transfer record this 14th day of March, 2001.

_______________, County Clerk
for Don Brace

State of Kansas)
Sedgwick County) SS

This is to certify that this plat has been filed for record in the office of the Register of Deeds, this 22nd day of March, 2001 at 9:30 o'clock A.M; and is duly recorded.

_______________, Register of Deeds
Bill Meek

#1958188

_______________, Deputy
Linda Kizzire

QUIK TRIP EIGFTH AD