S.W.D. NO. 40
STORM CHANNEL IN WESTPARK ADDITION
PROJECT NO.
468-76-245-80692-000-000-001

CITY OF WICHITA, KANSAS
DEAN SELLERS
ACTING CITY ENGINEER

GENERAL NOTES

1. CONTRACTOR SHALL COORDINATE WORK WITH PAVING AND SANITARY CONTRACTORS AND CONTACT RELEVANT UTILITY COMPANIES AND OTHER AGENCIES INVOLVED WITH THIS PROJECT SITE DEVELOPMENT.
2. FIELD ENGINEER SHALL TAKE TIES TO ALL IRONS AND THIMBLES IN THE PROJECT AREA BEFORE CONSTRUCTION BEGINS. FIELD ENGINEER SHALL REPLACE ALL SUCH IRONS AND THIMBLES DISTURBED DURING CONSTRUCTION.
3. ALL CONCRETE SHALL BE "6-SACK CONCRETE" UNLESS OTHERWISE NOTED.
4. THE RIPRAP FOR THIS PROJECT SHALL BE TYPE 3. THE TYPE 3 RIPRAP SHALL BE 12" RIPRAP ON 6" SAND AND GRAVEL BEDDING. THE ROCK FOR RIPRAP AND GRAVEL PROTECTION SHALL BE HARD, DENSE, DURABLE, AND SHALL BE REASONABLY WELL GRADED. THE SIZE RANGE OF ROCK USED SHALL BE A MAXIMUM OF ONE CUBIC FOOT AND A MINIMUM OF 1 1/2 INCH. THE 6 INCH SAND AND GRAVEL BEDDING FOR RIPRAP SHALL BE A CONTINUOUS LAYER OF SAND AND GRAVEL OR SAND AND CRUSHED ROCK, REASONABLY WELL GRADED TO A MAXIMUM OF 1 1/2 INCHES IN SIZE.
5. CONTRACTOR SHALL AVOID UNCOVERING EXISTING WATER LINES UNLESS ABSOLUTELY NECESSARY. UNCOVERING SHALL BE DONE ONLY IN THE PRESENCE OF A WATER DEPT. ENGINEER.
6. THE COST ITEM "CLEARING RIGHT OF WAY" INCLUDES THE COST OF REMOVING HEDGES AT THE SOUTH END OF THE CHANNEL.
7. ALL METAL PIPES SHALL BE HELICOALLY CORRUGATED PIPE COATED BOTH INSIDE AND OUTSIDE. THE COATING SHALL BE POLYMERIC AS SPECIFIED IN AASHTO DESIGNATION-M246-78, TYPE B. BITUMINOUS COATING SHALL NOT BE USED. ALL CONNECTIONS FOR THESE FULLY PAVED AND FULLY COATED PIPES SHALL BE FACTORY-TIGHT CONNECTED USING HUGGER TYPE COUPLER OR EQUAL.
8. THE EXCESS EXCAVATED MATERIAL SHALL BE DISPOSED OF ON ADJACENT SITE AS DIRECTED BY DEVELOPER, DEVELOPER'S ENGINEER OR SITE ENGINEER.

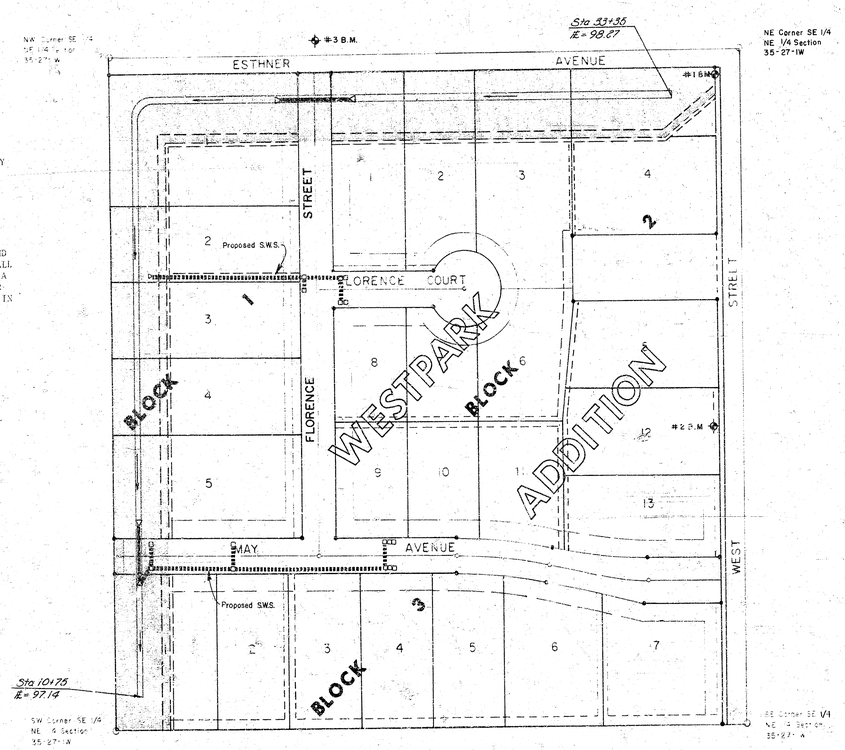

No Scale

INDEX TO DRAWINGS

1	TITLE SHEET
2-6	PLAN & PROFILE
7-8	HEADWALL DETAILS
9-13	CROSS SECTIONS

Van Doren - Hazard - Stallings
Architects • Engineers • Planners
Topeka Wichita Minneapolis

SHEET 1 OF 13

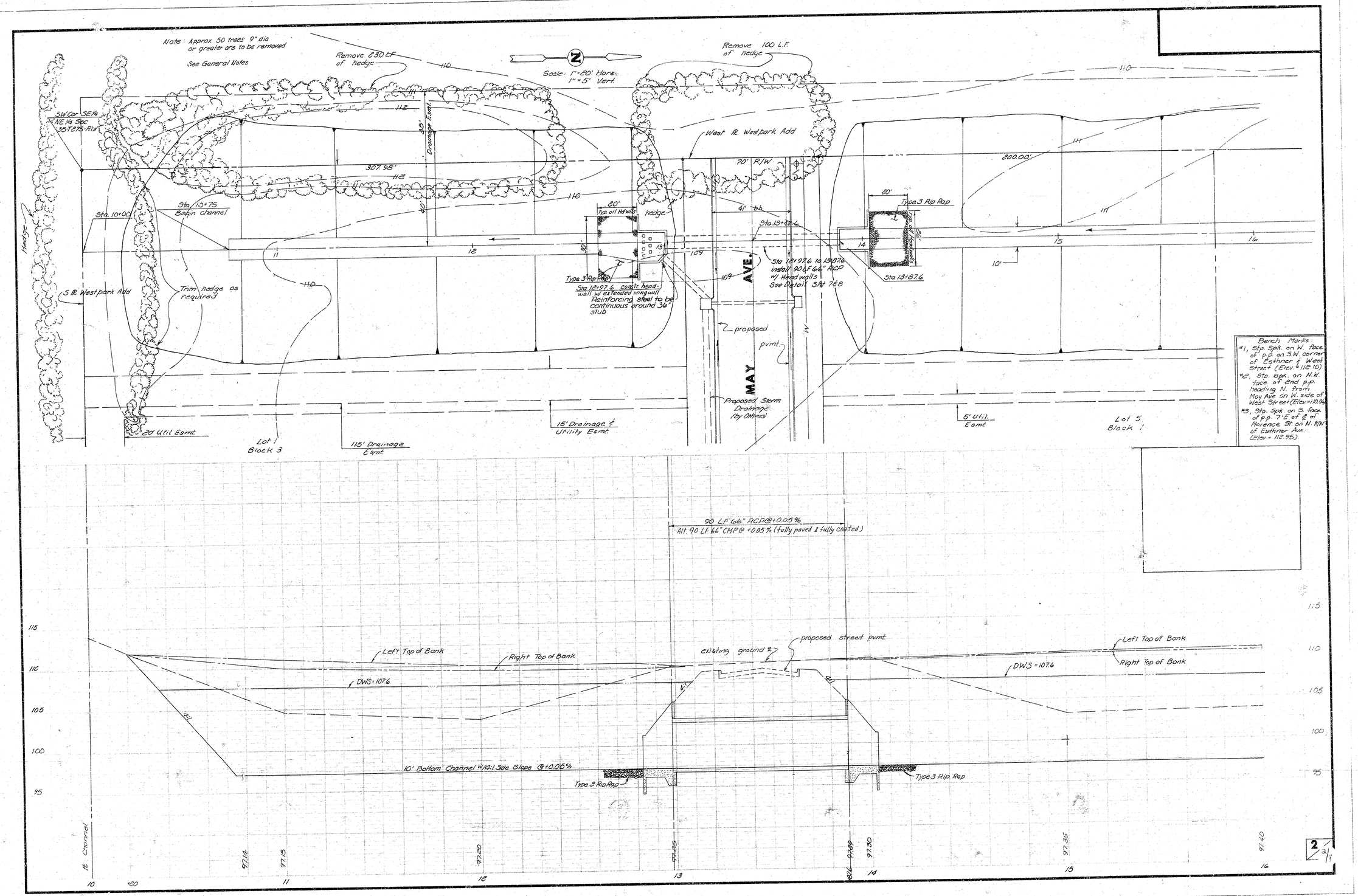
Note: Approx. 50 trees 9" dia or greater are to be removed
See General Notes
Remove 830 LF of hedge
Scale: 1"=20' Horz. 1"=5' Vert.
Remove 100 L.F. of hedge
SW Cor SE¼ NE¼ Sec 35 T27S R1W
35' Drainage Esmt.
West R. Westpark Add
70' R/W
307.98'
200.00'
Sta. 10+00
Sta. 10+75 Begin channel
Hedge
20' Typ all Hdwls
hedge
41' bb
Sta 13+42.6
Type 3 Rip Rap
Sta 12+97.6 constr. head-wall w/ extended wingwall Reinforcing steel to be continuous around 36" stub
Sta 12+97.6 to 13+87.6 install 90 LF 66" RCP w/ Head walls See Detail SN 7-28
Sta 13+87.6
MAY AVE.
proposed pvmt.
Proposed Storm Drainage (by Others)
S.R. Westpark Add
Trim hedge as required
20' Util Esmt.
Lot 1 Block 3
115' Drainage Esmt.
15' Drainage & Utility Esmt.
5' Util. Esmt.
Lot 5 Block 1
Bench Marks:
#1, Stp. Spk. on W. face of p.p. on S.W. corner of Esthner & West Street (Elev. = 112.10)
#2, Stp. Spk. on N.W. face of 2nd p.p. heading N. from May Ave. on W. side of West Street (Elev. = 110.04)
#3, Stp. Spk. on S. face of p.p. 7' E. of ℄ of Florence St. on N. R/W of Esthner Ave. (Elev. = 112.95)
90 LF 66" RCP @ +0.05%
Alt. 90 LF 66" CMP @ +0.05% (fully paved & fully coated)
Left Top of Bank
Right Top of Bank
DWS = 107.6
existing ground ℄
proposed street pvmt.
10' Bottom Channel w/ 1:1 Side Slope @ +0.05%
Type 3 Rip Rap
1:1 Channel
2/2

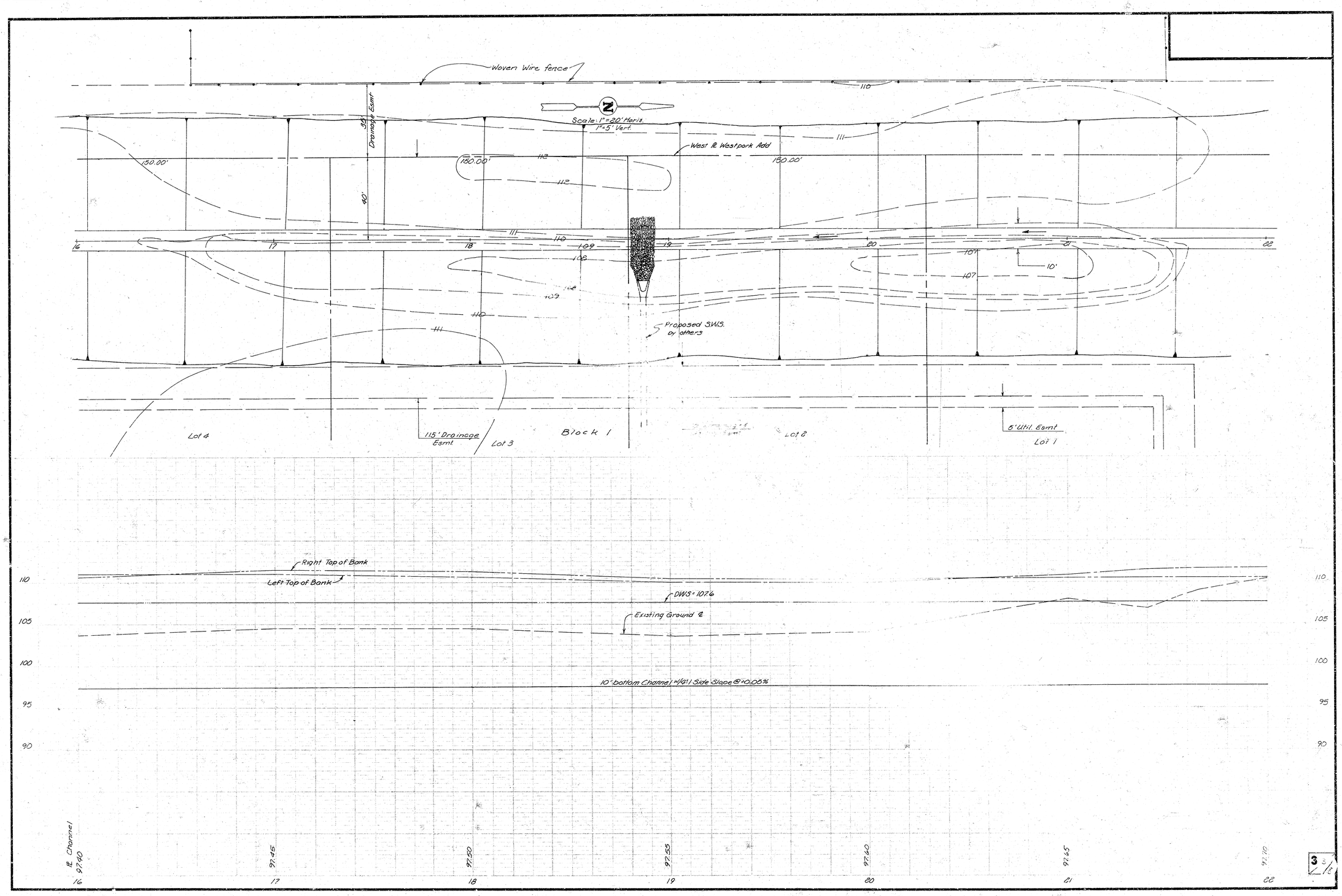
Woven Wire fence
Drainage Esmt
30'
20'
Scale: 1" = 20' Horiz.
1" = 5' Vert.
West Ft. Westpark Add
150.00'
150.00'
150.00'
110
111
112
112
111
110
109
108
109
110
111
107
107
10'
16
17
18
19
20
21
22
Proposed SWS. by others
Lot 4
115' Drainage Esmt
Lot 3
Block 1
Lot 2
5' Util. Esmt
Lot 1
Right Top of Bank
Left Top of Bank
DWS = 107.6
Existing Ground ℄
10' bottom Channel 4:1 & 4:1 Side Slope @ +0.05%
110
105
100
95
90
FE Channel
97.40
97.45
97.50
97.55
97.60
97.65
97.70
16
17
18
19
20
21
22

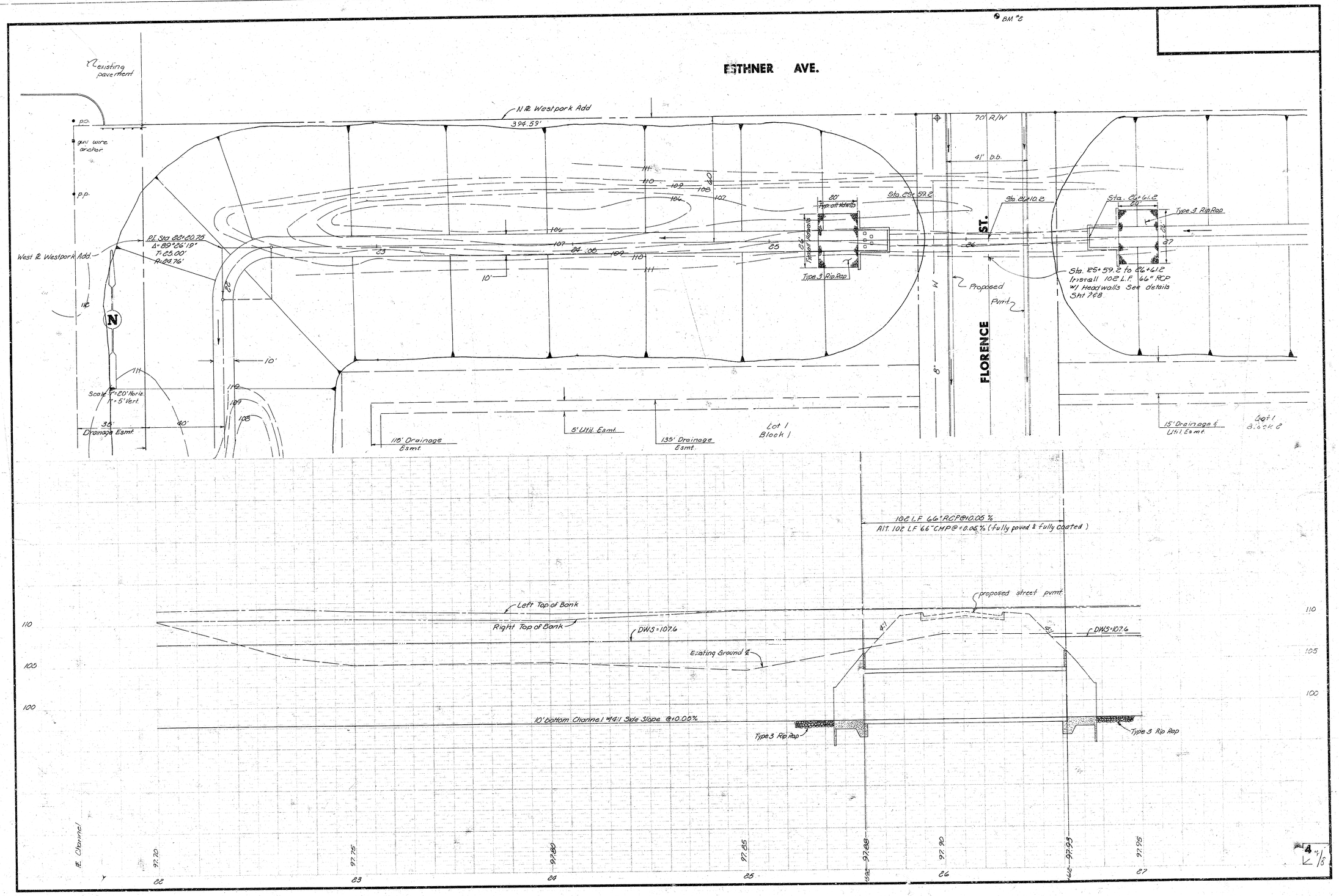
BM #2
ESTHNER AVE.
existing pavement
N.R. Westpark Add
394.59'
70' R/W
41' D.B.
p.o.
guy wire anchor
p.p.
West R. Westpark Add
P.I. Sta 22+20.75
Δ=89°26'19"
T=25.00'
R=24.76'
Sta. 25+59.2
Sta. 26+10.2
Sta. 26+61.2
Temp. ctl Headwalls
Typical Headwalls
Type 3 Rip Rap
Sta. 25+59.2 to 26+61.2
Install 102 L.F. 66" RCP
w/ Headwalls See details
Sht 7&8
Proposed Pvmt
FLORENCE ST.
Scale 1"=20' Horiz.
1"=5' Vert.
35' Drainage Esmt.
118' Drainage Esmt.
5' Util. Esmt.
135' Drainage Esmt.
Lot 1 Block 1
15' Drainage & Util. Esmt.
Lot 1 Block 2
102 L.F. 66" RCP @ 10.06 %
Alt. 102 LF 66" CMP @ +0.06 % (fully paved & fully coated)
proposed street pvmt.
Left Top of Bank
Right Top of Bank
DWS=107.6
Existing Ground
10' Bottom Channel 4:1 Side Slope @ +0.06%
Type 3 Rip Rap
FE Channel
97.70
97.75
97.80
97.85
97.88
97.90
97.93
97.95
22
23
24
25
26
27
110
105
100
4 of 8

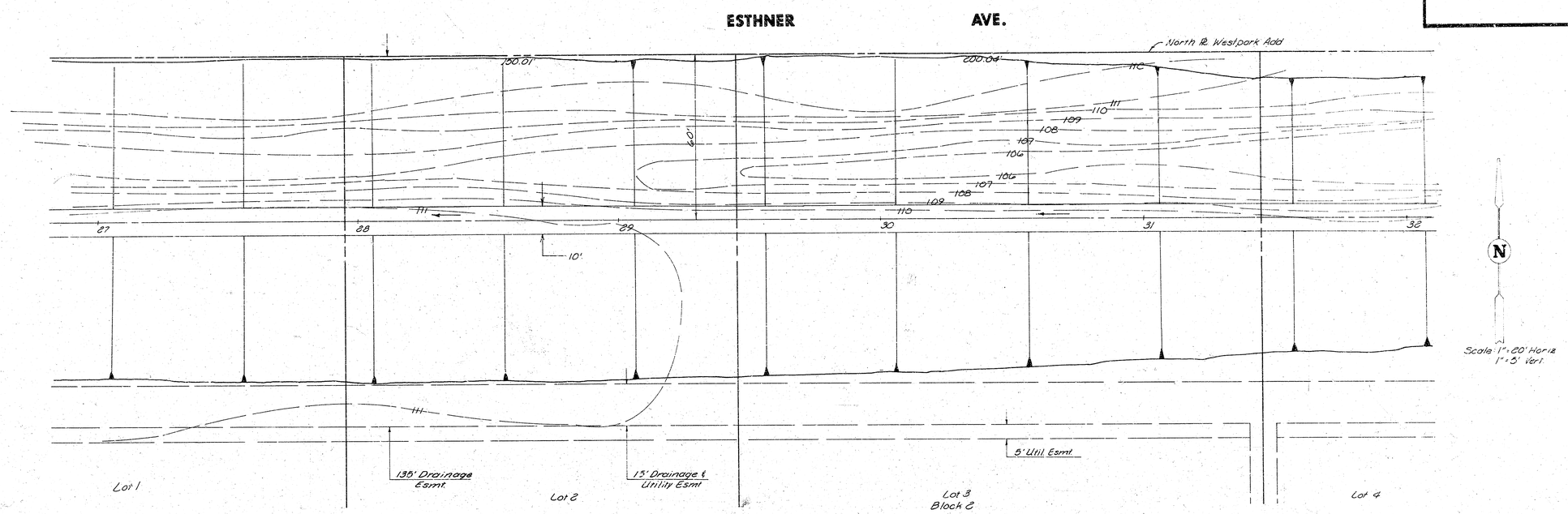
ESTHNER AVE.
North R. Westpark Add
200.01
200.04
110
111
109
108
107
106
27
28
29
30
31
32
10'
N
Scale: 1" = 60' Horiz.
1" = 5' Vert.
135' Drainage Esmt.
15' Drainage & Utility Esmt
5' Util. Esmt.
Lot 1
Lot 2
Lot 3
Block 2
Lot 4

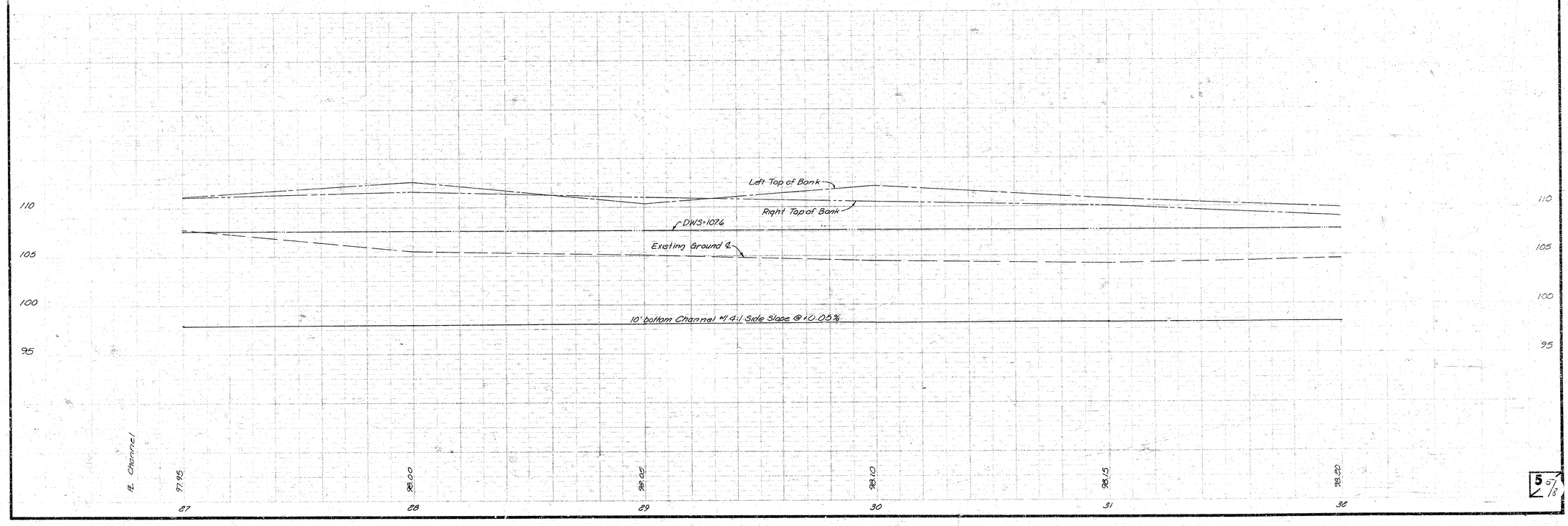
Left Top of Bank
Right Top of Bank
DWS=107.6
Existing Ground ℄
10' bottom Channel w/ 4:1 Side Slope @ +0.05%
110
105
100
95
R. Channel
97.95
98.00
98.05
98.10
98.15
98.20
27
28
29
30
31
32

5 of 8

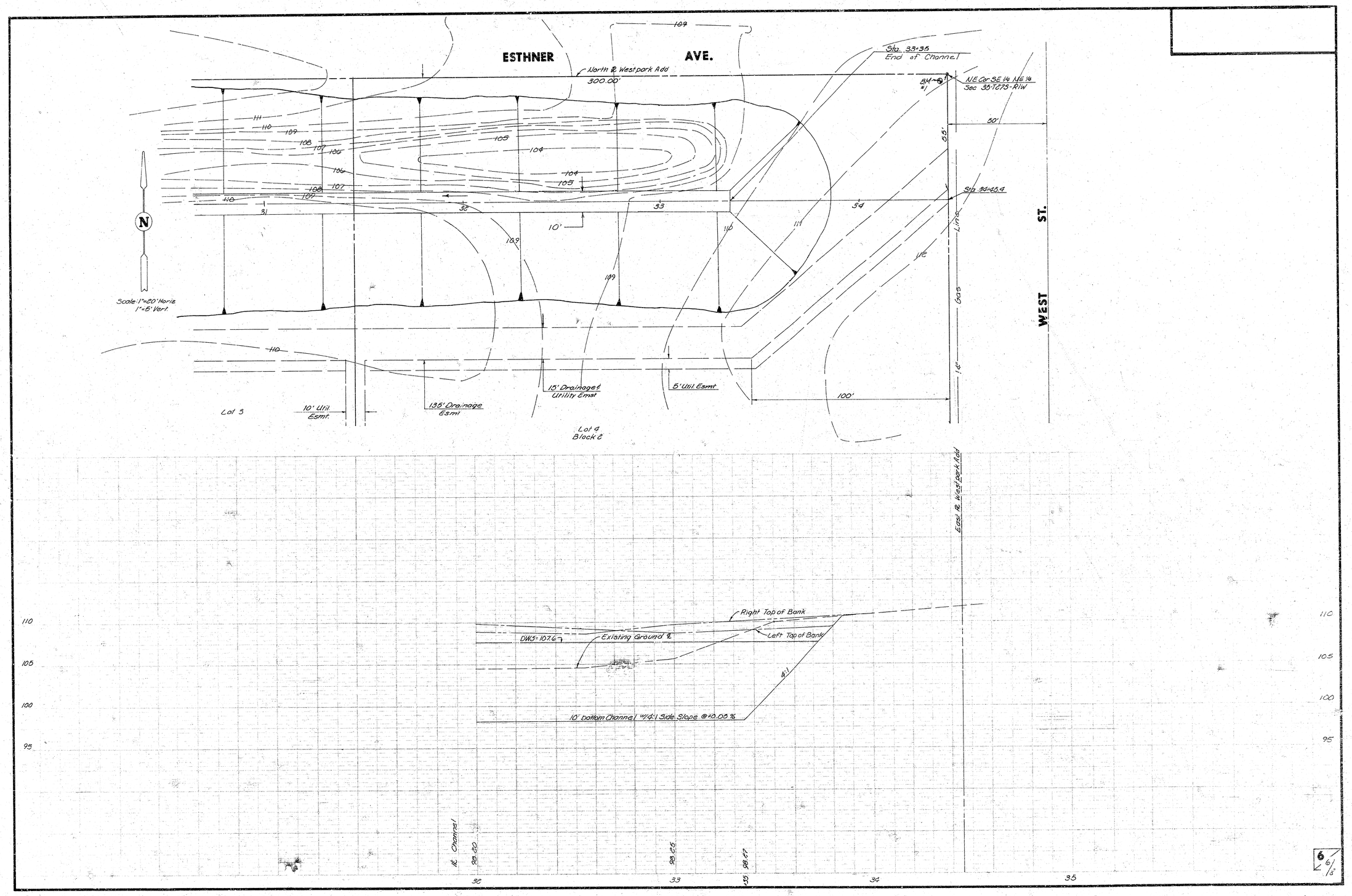
ESTHNER AVE.
North R. Westpark Add
300.00'
Sta. 33+35
End of Channel
BM #1
NE Cor SE ¼ NE ¼
Sec 35-T27S-R1W
50'
55'
Sta 34+45.4
WEST ST.
Gas Line
10'
100'
15' Drainage & Utility Esmt
5' Util. Esmt
10' Util. Esmt.
135' Drainage Esmt
Lot 3
Lot 4
Block 2
Scale 1"=20' Horiz
1"=5' Vert.
N
East R. Westpark Add
Right Top of Bank
Left Top of Bank
Existing Ground ℄
DWS=107.6
4:1
10' bottom Channel w/4:1 Side Slope @10.05%
℄ Channel
98.20
98.25
98.27
32
33
34
35
110
105
100
95

6/15

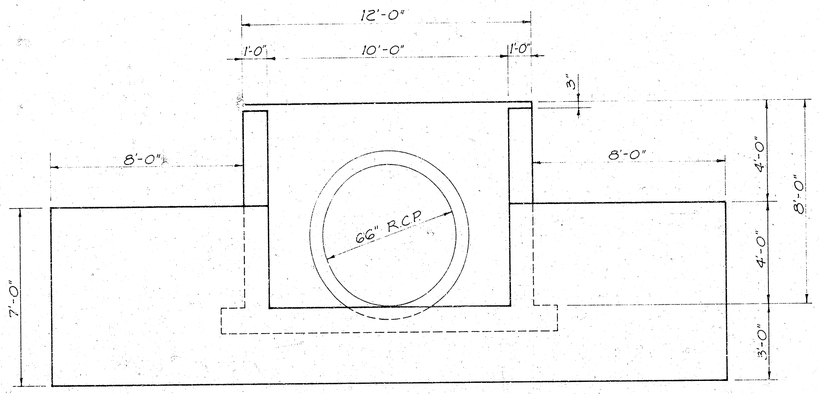

ELEVATION
Scale: 3/8" = 1'-0"

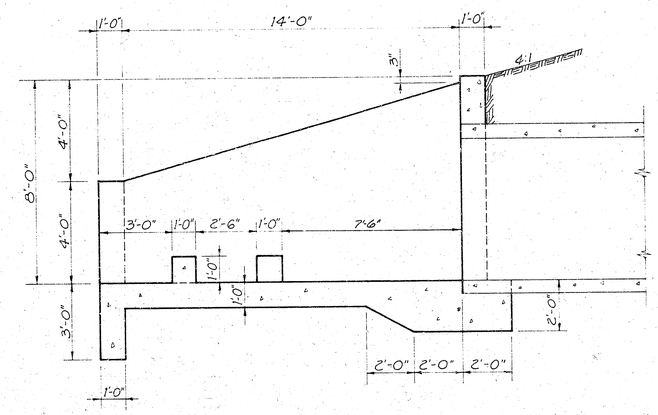

SECTION A-A
Scale: 3/8" = 1'-0"

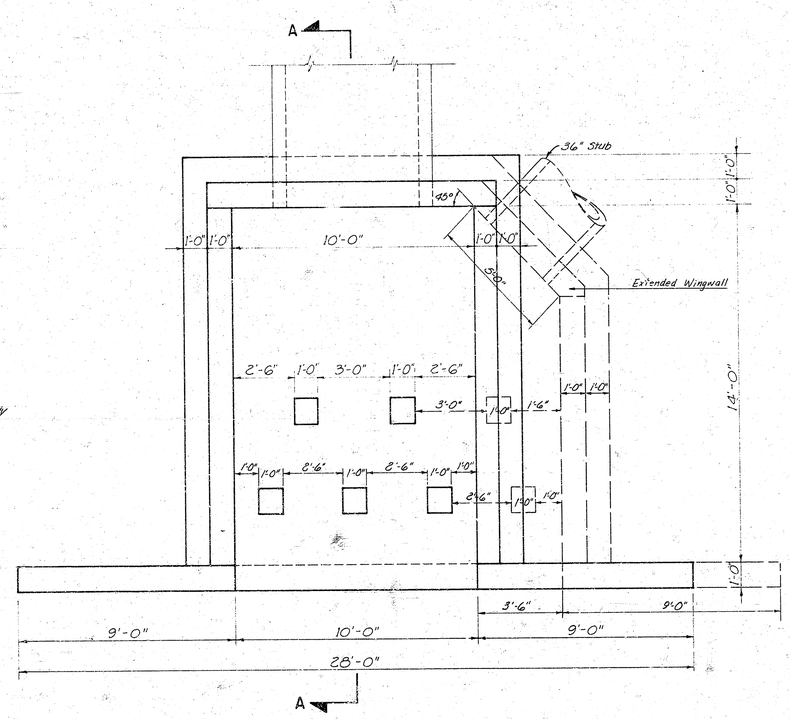

PLAN
Scale: 3/8" = 1'-0"

Notes
1. Extended wingwall is to be used at Sta 12+97.6 only
2. Baffle blocks are to be used on downstream headwalls only

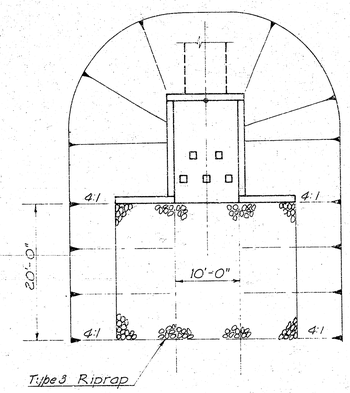

LOCATION PLAN
Scale: 1" = 10'

WESTPARK ADDITION STORM CHANNEL SWD 40	Design
	Drawn by
	Checked by
CONCRETE HEADWALL DETAIL 66" RCP	Date
	Job no.

Van Doren - Hazard - Stallings
Architects • Engineers • Planners
Topeka Wichita Minneapolis

Sheet 7

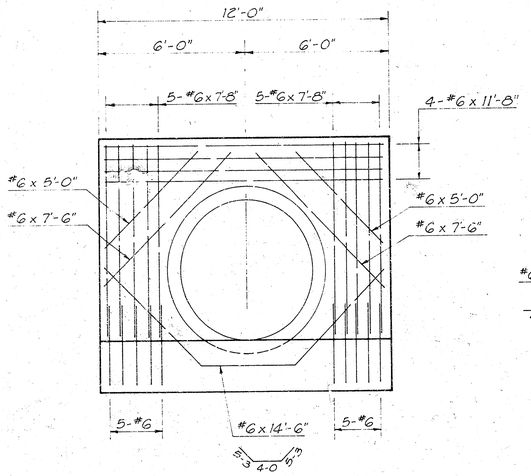

FRONT AND BACK FACE

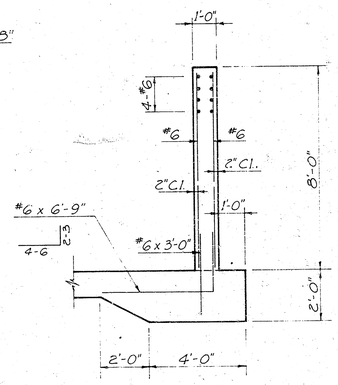

SECTION

BACKWALL REINFORCING

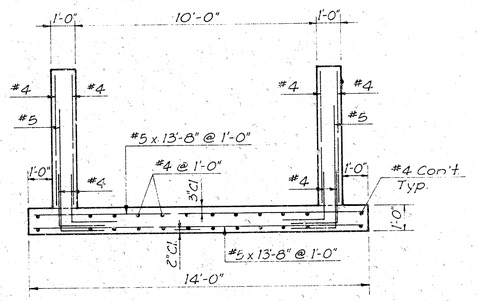

WINGWALL SECTION

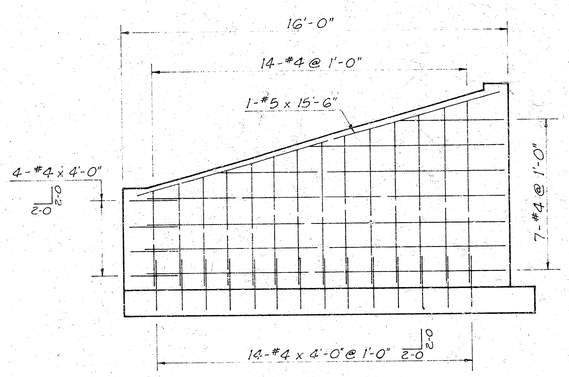

FRONT FACE

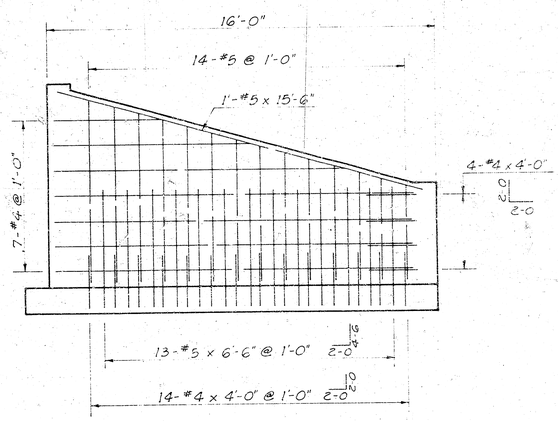

BACK FACE

WINGWALL REINFORCING

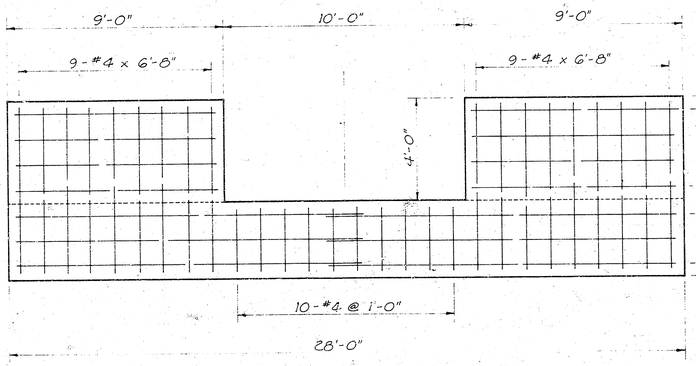

FRONT AND BACK FACE

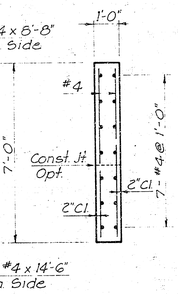

SECTION

TOEWALL REINFORCING

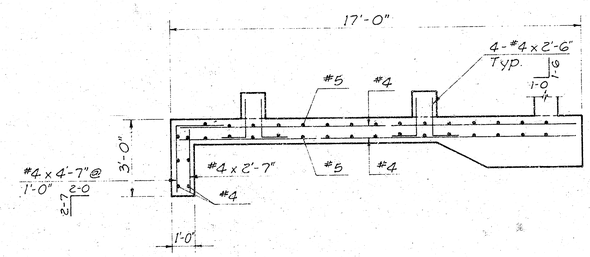

FLOOR SECTION

Scale: 3/8" = 1'-0"

WESTPARK ADDITION STORM CHANNEL SWD 40	Design
	Drawn by
CONCRETE HEADWALL DETAIL 66" RCP	Checked by
	Date
	Job no.
Van Doren - Hazard - Stallings Architects • Engineers • Planners Topeka Wichita Minneapolis	Sheet 8 of 8/8