STATE	PROJECT NO.	YEAR	SHEET NO.	TOTAL SHEETS
KANSAS	87 N-0362-01	2007	15	48

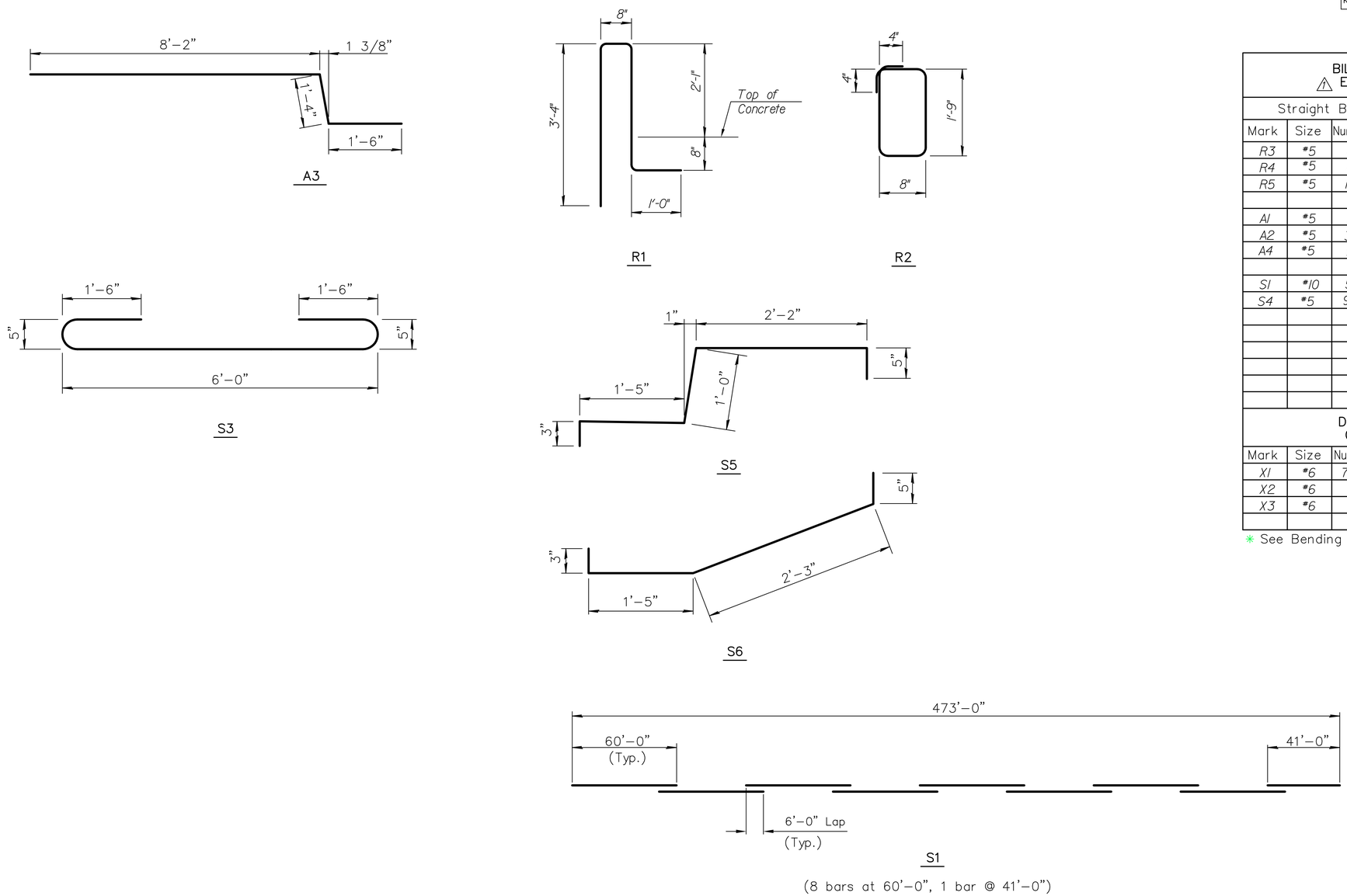

(8 bars at 60'-0", 1 bar @ 41'-0")

BILL OF REINFORCING STEEL
⚠ Epoxy Coated - Grade 60

Straight Bars				Bent Bars			
Mark	Size	Number	Length	Mark	Size	Number	Length
R3	#5	24	5'-0"	R1	#5	1400	7'-9"
R4	#5	24	23'-2"	R2	#5	24	5'-6"
R5	#5	180	28'-0"				
A1	#5	16	40'-8"	A3	#5	16	11'-0"
A2	#5	32	22'-2"				
A4	#5	16	10'-0"				
S1	#10	58	*521'-0"	S3	#5	931	7'-9"
S4	#5	931	6'-0"	S5	#5	1870	5'-3"
				S6	#5	1870	4'-4"

DRILLING AND GROUTING
(For Information Only)

Mark	Size	Number	Length
X1	#6	7196	3'-0"
X2	#6	60	1'-4"
X3	#6	60	2'-0"

* See Bending Diagrams

BENDING DIAGRAMS
(All dimensions are out to out of bars.)

⚠ 10/23/07 Added "Epoxy Coated"

KANSAS DEPARTMENT OF TRANSPORTATION

BILL OF REINFORCING STEEL AND BENDING DIAGRAMS

PROJ. NO. 87 N-0362-01 SEDGWICK CO.

MKEC ENGINEERING CONSULTANTS, INC.
WICHITA, KANSAS

DESIGNED BY:	JAG	CHECKED BY:	KJS	
DRAWN BY:	DPG	DATE: 4/23/07	SHEET 15	OF 48

J:\Civil\04223\dwg\BRIDGE\04223REI.DWG 10/23/2007 02:49:26 PM CST