STATE	PROJECT NO.	YEAR	SHEET NO.	TOTAL SHEETS
KANSAS	87 N-0362-01	2007	31	48

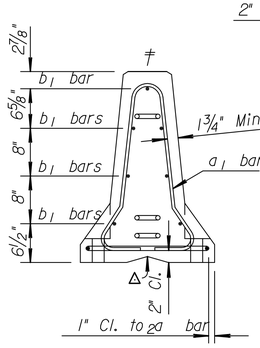

SECTION A-A
TYPICAL SECTION
(Stirrup Placement)

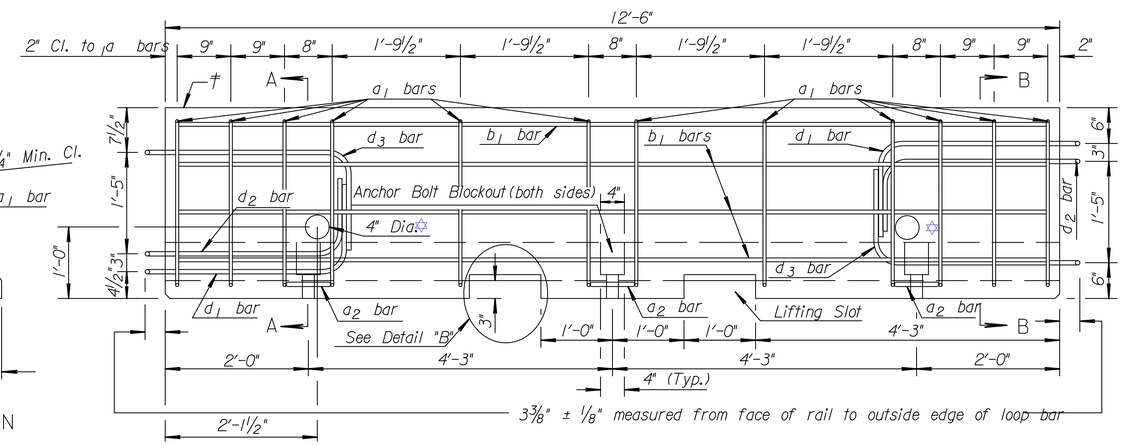

ELEVATION (SECTION)

† Marked End
4" ✡ diameter - 11 gauge steel round mechanical tubing sleeve. These holes are optional.
△ V Notch is optional

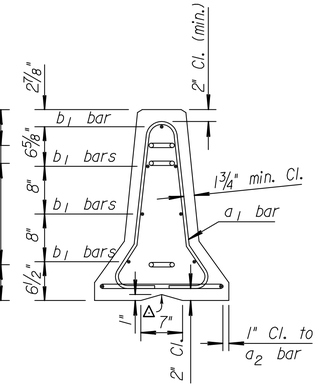

SECTION B-B
TYPICAL SECTION
(Stirrup Placement)

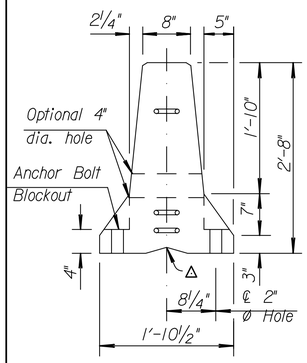

END VIEW

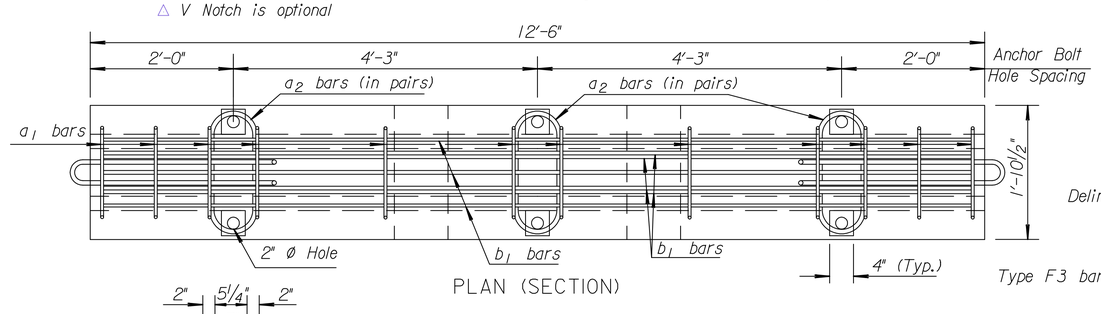

PLAN (SECTION)

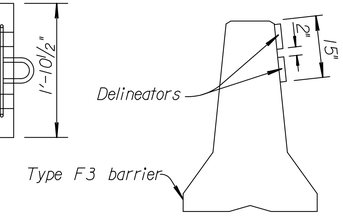

DELINEATOR DETAILS

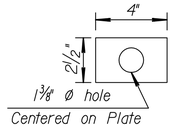

(1/2" Top Plate Detail)

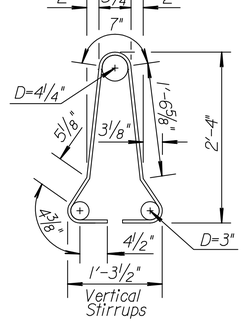

a1 bar

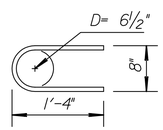

a2 bar

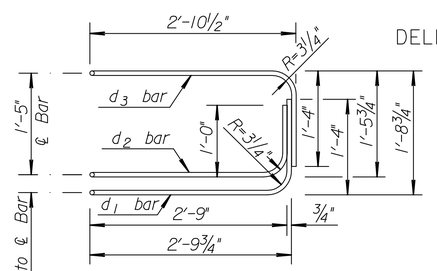

ELEVATION

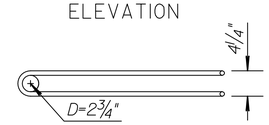

PLAN
LOOP BAR ASSEMBLY
(Marked end shown, invert for other end)
(Material as stated in General Notes)

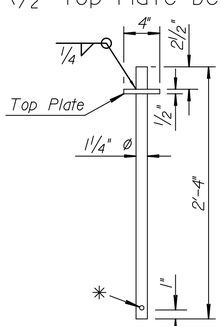

DETAIL A
CONNECTION PIN
(A36 Steel) 10.9 lbs. each

✳ 5/8" Ø hole for retainer bolt. The retainer bolt & nut are installed at Contractor's option.
Note: Retainer bolt & nut required with Tie Down Strap.

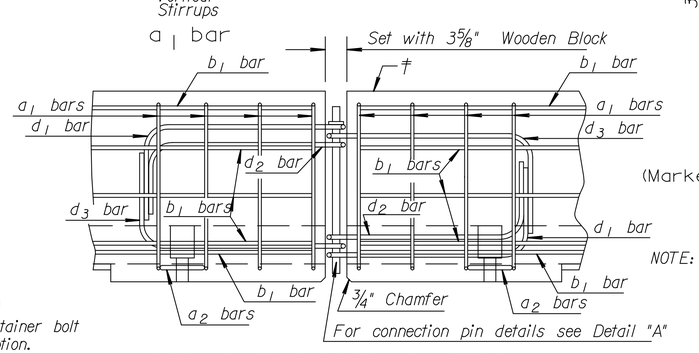

DETAILS OF BARRIER CONNECTION

NOTE: At no time shall the barriers be lifted, moved, etc. by use of the loop bars: d_1, d_2 or d_3.

GENERAL NOTES:

MATERIAL: Use ASTM A615, Grade 60 reinforcing bars, except for the loop bars (d_1, d_2 and d_3).

The loop bars (d_1, d_2 and d_3) shall be 3/4" smooth steel bars with a minimum yield of 60 ksi, a tensile strength of not less than 1.25 times the yield strength but a minimum of 80 ksi, a minimum 14% elongation in 8 inches, and passing a 180 degree bend test using a 3.5" D pin bend diameter. The loops shall be installed within 1/8" of the plan dimensions.

Use air-entrained concrete with f'c = 5,000 p.s.i.

SECTION: The section furnished must generally comply with dimensions shown. Requests for minor variations in section geometry and attachments may be submitted to the Engineer for approval.

LIFTING SLOTS: Lifting slots shall be constructed where specified on the plans to facilitate the drainage of water after installation on the roadway.

TEMPORARY CONCRETE SAFETY BARRIER: Furnishing and placing of all materials when required and all labor and equipment required to position the temporary barrier shall be included in the Contract unit price bid for "Concrete Safety Barrier (Type F3)(Temporary)". Any relocation of the barrier required for the project shall be paid in accordance with the Special Provisions under the bid item "Concrete Safety Barrier (Type F3) (Temporary-Relocate)". Unless otherwise noted on the Plans, the Temporary Concrete Safety Barrier shall become the property of the Contractor and shall be removed from the site upon acceptance of the completed project. Approximate weight of one unit equals 2.7 tons.

SURFACE PREPARATION: Barrier shall be placed on a paved surface. All loose dirt and sand shall be removed from the roadway surface just prior to placement of the barrier.

MARKING: The left end (†) of each barrier shall be permanently marked by stamping or forming into the barrier the following information:
- Type F3
- Manufacturer code (as specified by KDOT Bureau of Const. & Maint.)
- Date manufactured (month and year)

DELINEATION: Delineators shall be spaced on 50' centers, except through curves having 1900' or greater curvature where they shall be spaced on 25' centers.

The delineation shall be mounted on the side of the Temporary Concrete Safety Barrier with two delineators at each location. Each delineator shall have a minimum height-to-width ratio of 1.75, and a minimum reflective surface area of 7 sq. in.. The delineators shall be affixed to the Temporary Concrete Safety Barrier as recommended by the manufacturer.

Delineators shall be attached to bridge rail or other structures in construction zones when roadway is narrowed and traffic is adjacent to the structure. The method and location of placement shall be similar to permanent barrier delineation.

When traffic flow is in one direction, the delineators shall be yellow when used on the left,white when used on the right. When traffic flow is in both directions delineators shall be placed back-to-back, and shall correspond to the color of the edge line.

The work and materials required for the installation of delineators as mentioned shall be subsidiary to the bid item "Concrete Safety Barrier (Type F3) (Temporary).

Note: If necessary, include Standard Drawing RD622A for Taper Section, Standard drawing RD622B for anchor and tie down details, Standard Drawing RD622C for Bridges with thermal expansion of 1 1/2" or greater and Standard Drawing RD622D for Barrier Layouts.

Per 12'-6" Barrier Section

REINFORCING A615 Gr. 60					
Bar	Bar Size	Shape	No. of Bars	Length Ft.	Weight Lbs.
a_1	#4		12	6'-0"	48.1
a_2	#6		6	2'-11"	26.3
b_1	#5		7	12'-2"	88.8
LOOP ASSEMBLY					
d_1	#6		2	8'-5"	25.3
d_2	#6		2	7'-7"	22.8
d_3	#6		2	8'-6"	25.5

Concrete Quantity = 1.3 C.Y.
(Dimensions are out to out of bars unless otherwise noted.)

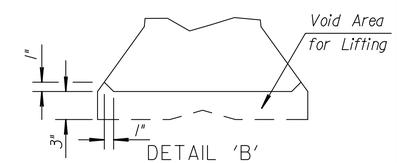

DETAIL 'B'
LIFTING SLOT DETAIL
(1" Chamfer to prevent spalling)

E:\CIVIL\04223\DISK COW\dwg\BIND\31_TEMP BARRIER.dwg 9/26/2007

NO.	DATE	REVISIONS	BY	APP'D
3				
2	2- 6-07	Revised additional sheets note	S.W.K.	J.O.B.
1				

KANSAS DEPARTMENT OF TRANSPORTATION

TEMPORARY CONCRETE SAFETY BARRIER TYPE F3

RD622 — 31

FHWA APPROVAL	1-19-07	APP'D. James O. Brewer	
DESIGNED	DETAILED	QUANTITIES	TRACED Bowser
DESIGN CK.	DETAIL CK.	QUAN.CK.	TRACE CK. King