3 V. 172.32 R in Pitche, N. End Road & N.E. Cor Elm & Elm Court
3 V. 175.50 R in Pitche, N. End N.W. Road & Elm & Rutland

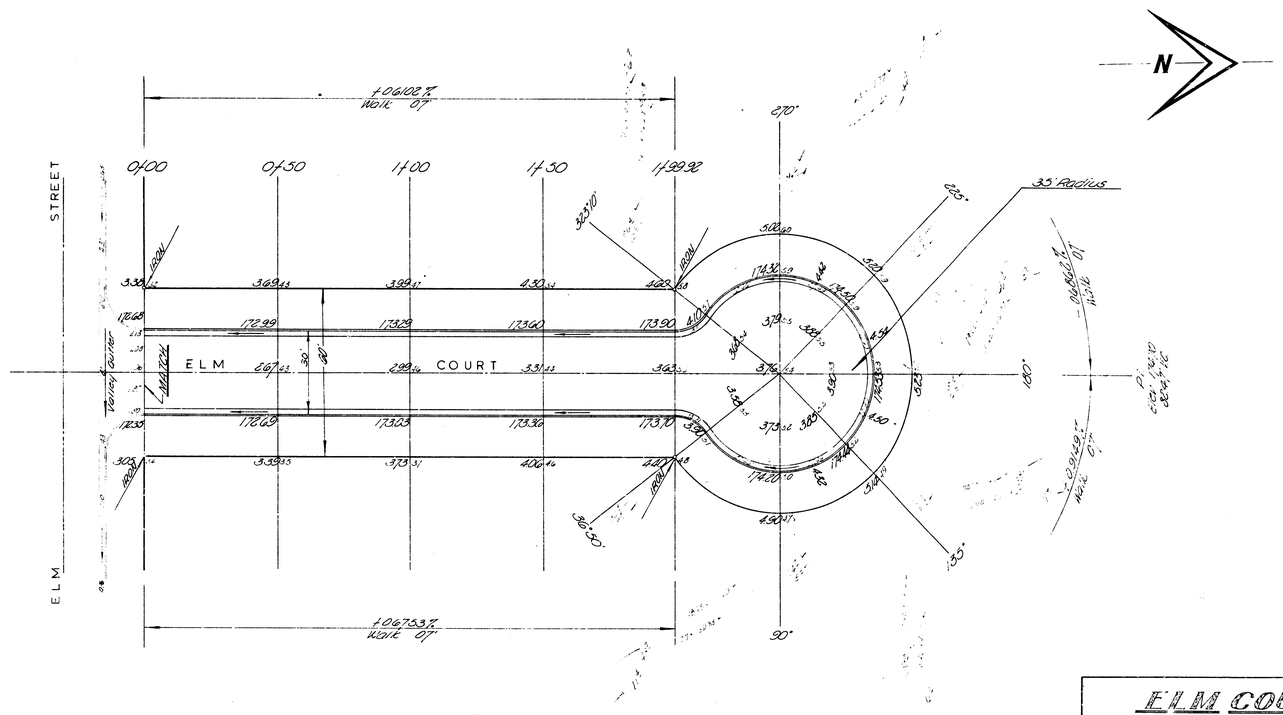


EXCAVATION
10222
1022
11244

# ELM COURT

N.L. Elm to & incl. Cul-de-sac
26'-2'-30' A.C.
City of Wichita, Kans.
B.E. Smith City Engineer
Date May 1962 Proj. No. 08-203