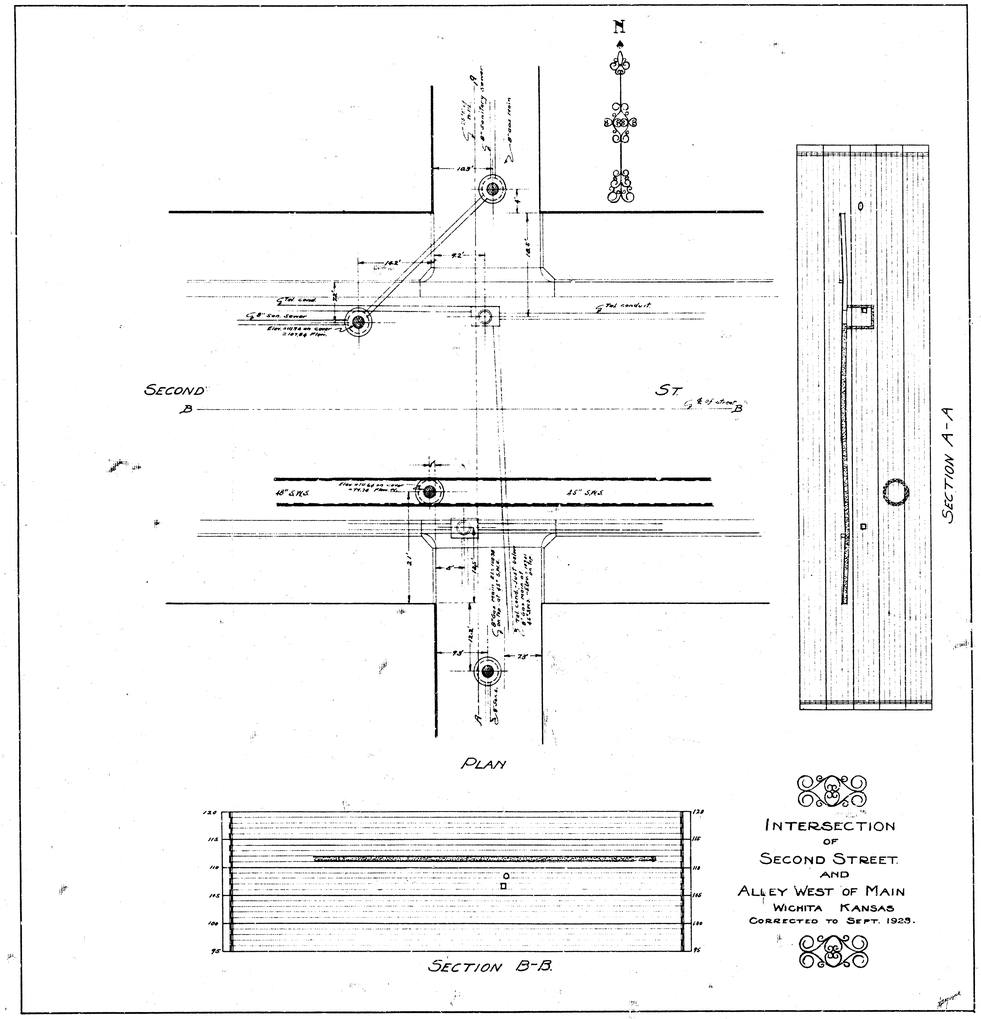
N
SECOND
ST.
PLAN
SECTION A-A
SECTION B-B.
INTERSECTION
OF
SECOND STREET
AND
ALLEY WEST OF MAIN
WICHITA KANSAS
CORRECTED TO SEPT. 1923.