Glontz
Seal
Seal
Exc
Check
Hall

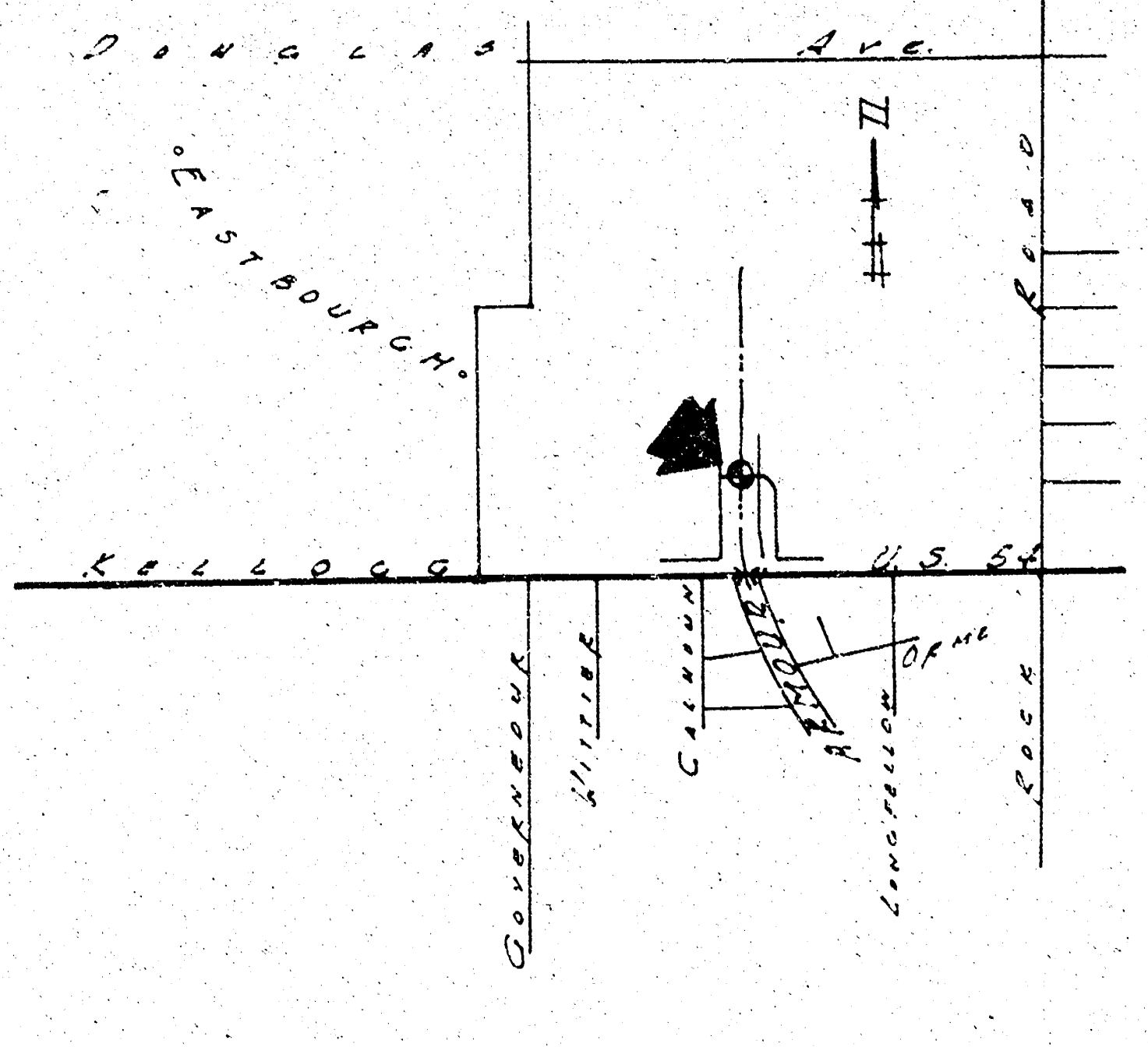
Douglas Ave.
Eastbourgh
Kellogg U.S. 54
Road
Governeour
Hillside
Calhoun
Armour
Orme
Longfellow
Rock
N

•LOCATION MAP•
No Scale

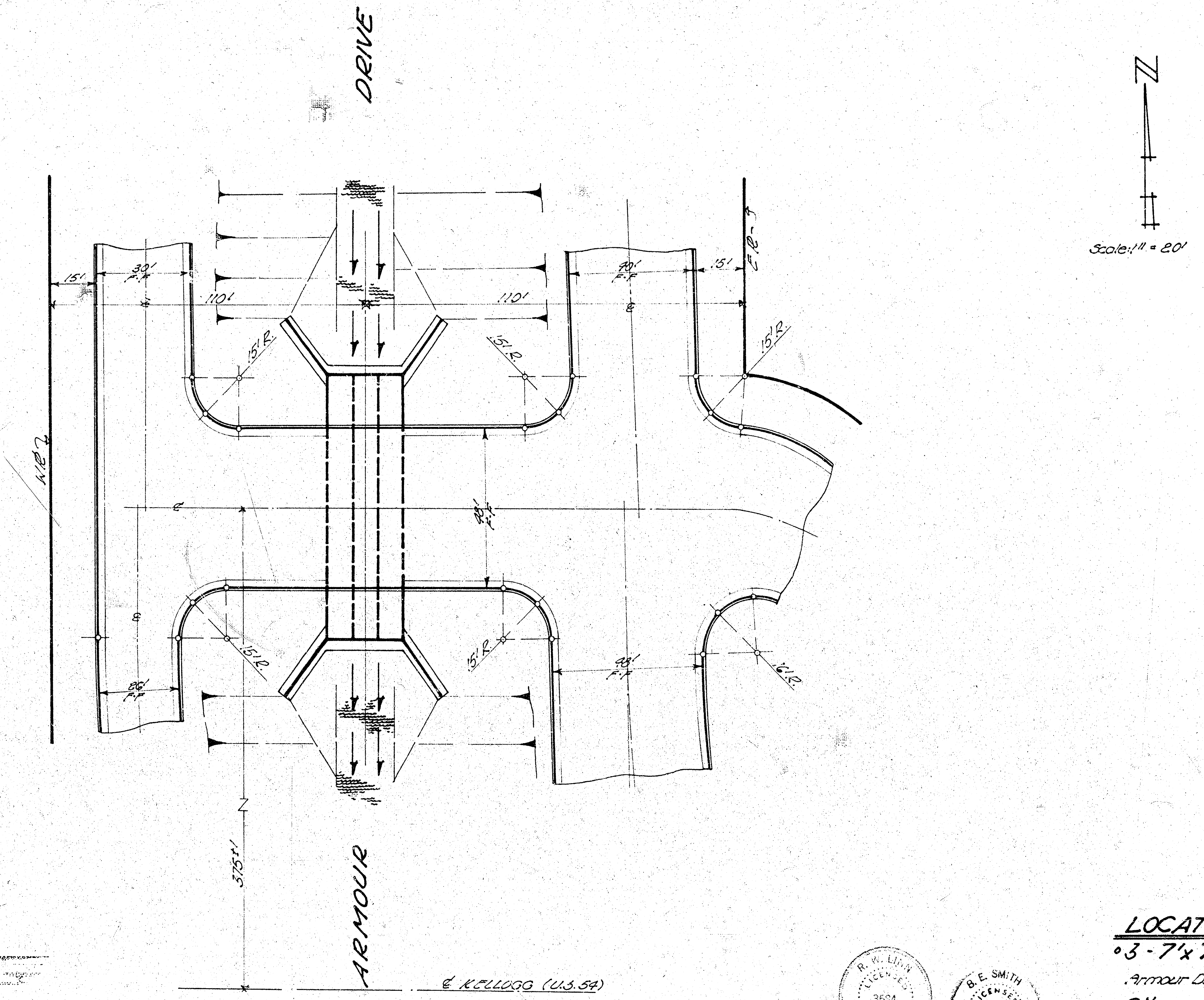
DRIVE
ARMOUR
15'
30' F-F
110'
110'
15' R
15' R
90' F-F
15'
E.R.-T
15' R
M.H.
98' F-F
86' F-F
15' R
15' R
98' F-F
16' R
375'±
℄ KELLOGG (U.S. 54)
N
Scale: 1" = 20'

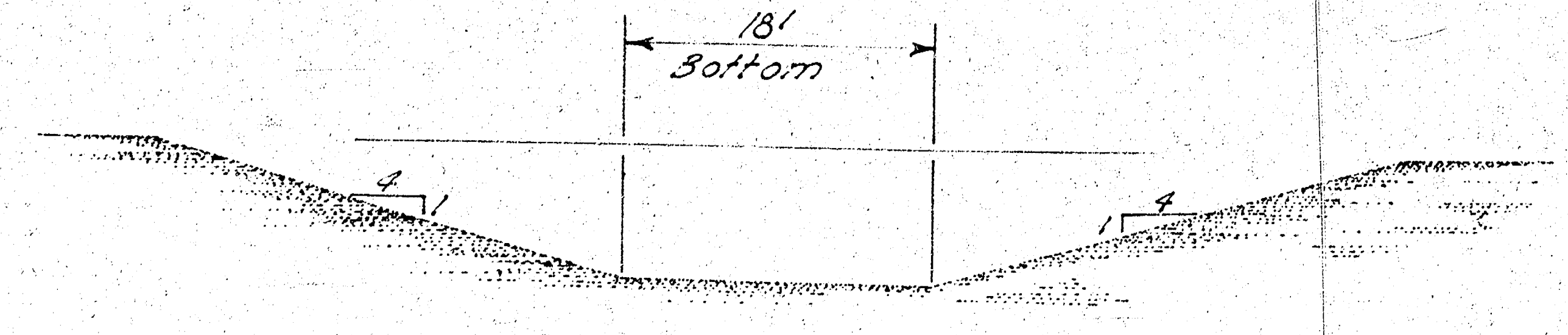
18'
Bottom
4
1
4
1

•EXISTING CHANNEL SECTION•

R. W. LINN 3684

B. E. SMITH 436

LOCATION MAP

•3-7'x7'x80' REINF. CONC. BOX CULVERT•

Armour Drive · NL. U.S. Hiway 54 to 500' S. NL. Rockwood So. 3rd Addition.

City of Wichita, Kansas

B.E. Smith City Engineer

Date · July 1967 1/5 Proj. No. C16·79

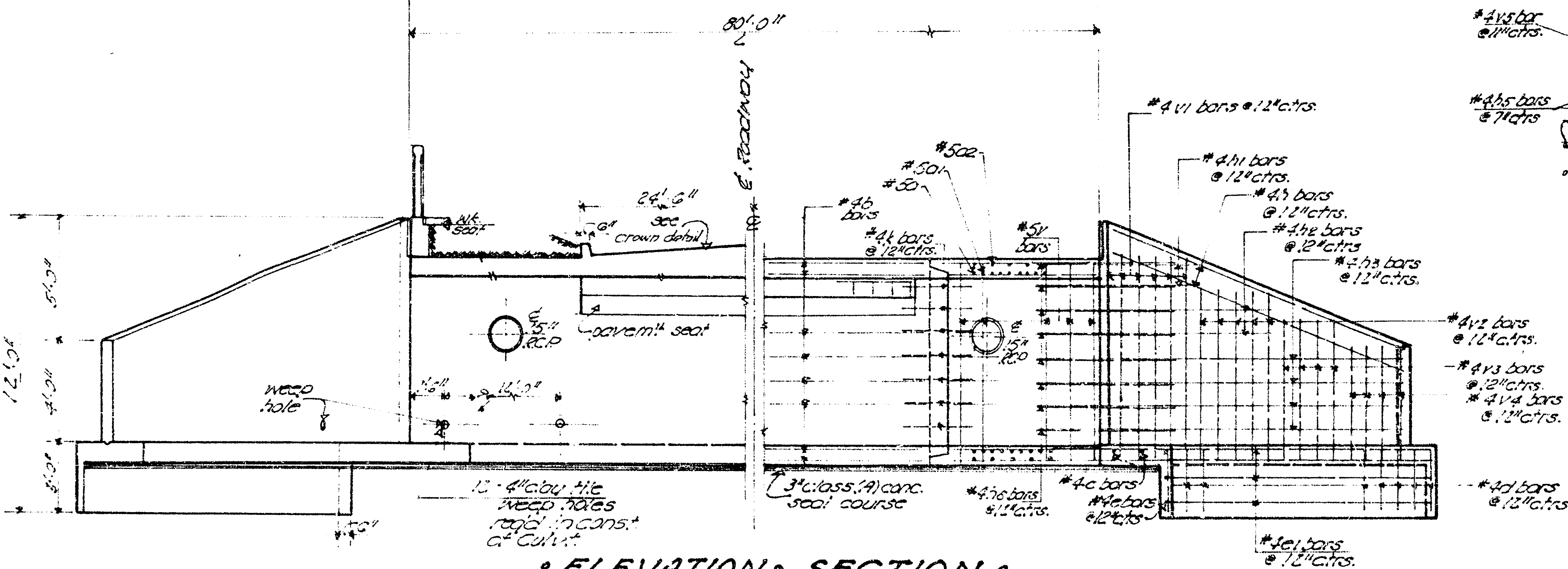
80'-0"
℄ Roadway
#4v1 bars @ 12"ctrs.
#5a2
#5a1
#5a
#4b bars
#4k bars @ 12"ctrs.
#5v bars
#4h1 bars @ 12"ctrs.
#4h bars @ 12"ctrs.
#4h2 bars @ 12"ctrs
#4h3 bars @ 12"ctrs.
#4v2 bars @ 12"ctrs.
#4v3 bars @ 12"ctrs.
#4v4 bars @ 12"ctrs.
24'-6"
6"
see crown detail
Wk. seat
℄ 15" R.C.P.
pavem't seat
℄ 15" R.C.P.
weep hole
1'-6"
12'-0"
5'-3"
4'-9"
12'-0"
3'-0"
12 - 4" clay tile weep holes req'd in const. of Culvt.
3" class (A) conc. seal course
#4h6 bars @ 12"ctrs.
#4c bars
#4e bars @ 12"ctrs
#4d bars @ 12"ctrs.
#4e1 bars @ 12"ctrs.

• ELEVATION & SECTION •

scale: 1/4" = 1'-0"

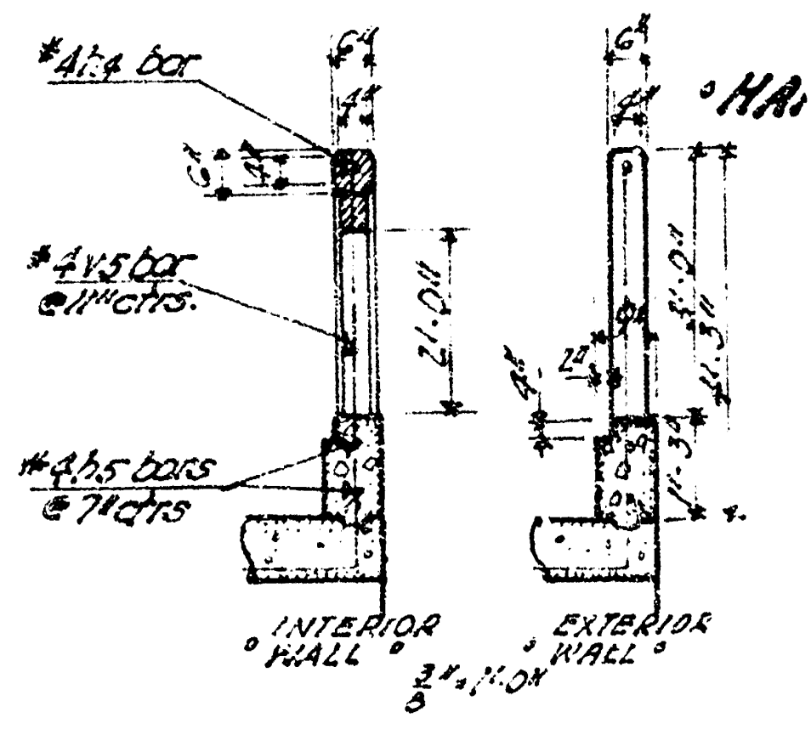
#4h4 bar
#4v5 bar @ 11"ctrs.
#4h5 bars @ 7"ctrs
6"
4"
2'-0"
3'-2"
1'-3"
INTERIOR WALL
EXTERIOR WALL
3/4" = 1'-0"

• HANDRAIL DETAIL •

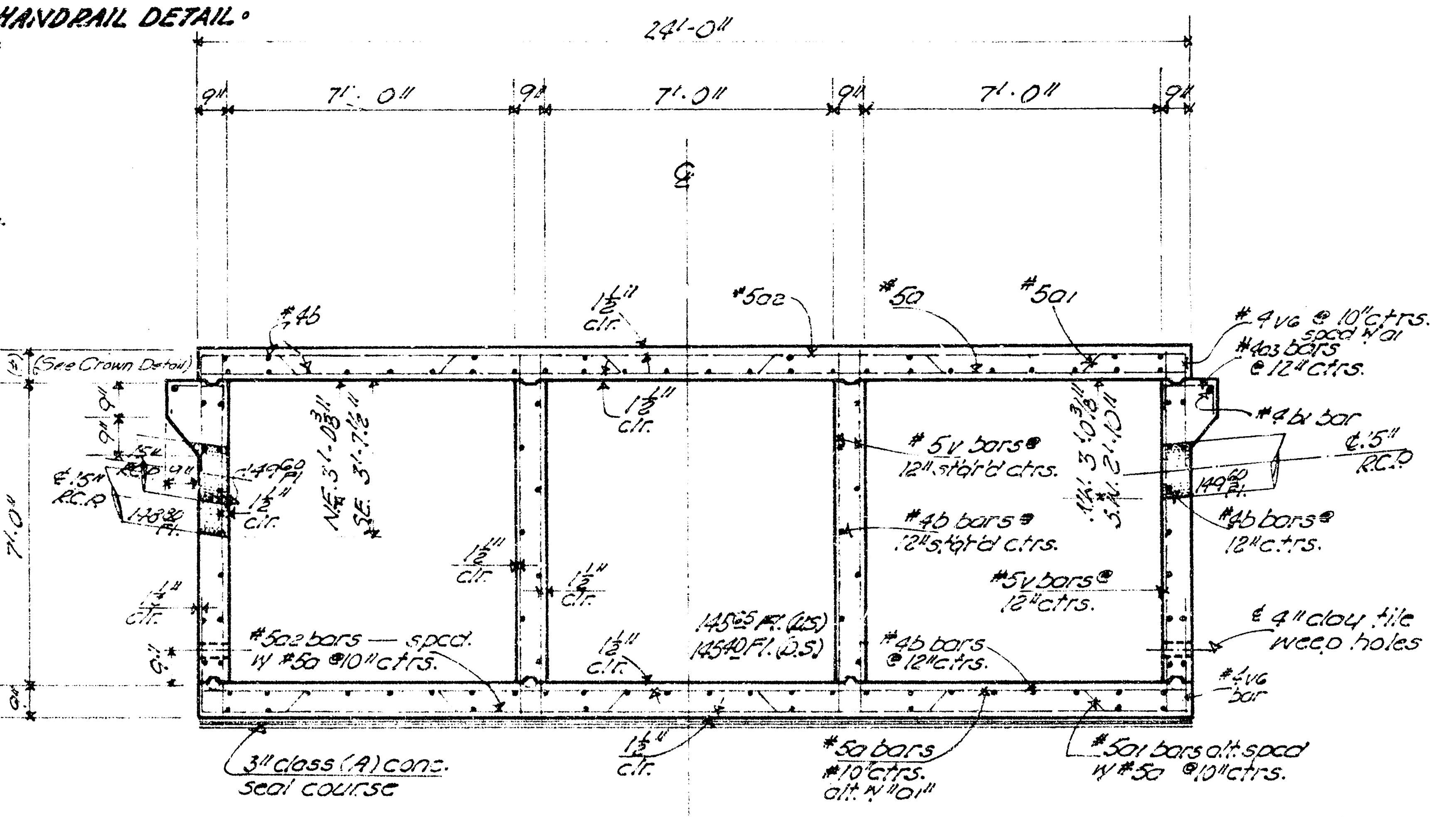
24'-0"
9"
7'-0"
9"
7'-0"
9"
7'-0"
9"
℄
(*) (See Crown Detail)
#4b
1 1/2" clr.
#5a2
#5a
#5a1
#4v6 @ 10"ctrs. spcd w/ a1
#4a3 bars @ 12"ctrs.
#4b1 bar
℄ 15" R.C.P.
149.60 Fl.
148.80 Fl.
℄ 15" R.C.P.
N.E. 3'-0 3/8"
S.E. 3'-7 1/2"
N.W. 3'-10 3/8"
S.W. 2'-10"
#5v bars @ 12" stag'd ctrs.
#4b bars @ 12" stag'd ctrs.
#4b bars @ 12"ctrs.
#5v bars @ 12"ctrs.
7'-0"
9"
1 1/2" clr.
145.65 Fl. (U.S.)
145.40 Fl. (D.S.)
#5a2 bars — spcd. w/ #5a @ 10"ctrs.
#4b bars @ 12"ctrs.
℄ 4" clay tile weep holes
#4v6 bar
3" class (A) conc. seal course
#5a bars @ 10"ctrs. alt. w/ "a1"
#5a1 bars alt. spcd w/ #5a @ 10"ctrs.

• SECTION - AA •

NOTE: Bevel all exposed edges with 3/4" triangular moulding. scale: 3/8" = 1'-0"
(*) thickness variable 9" to 1'-3 1/2"

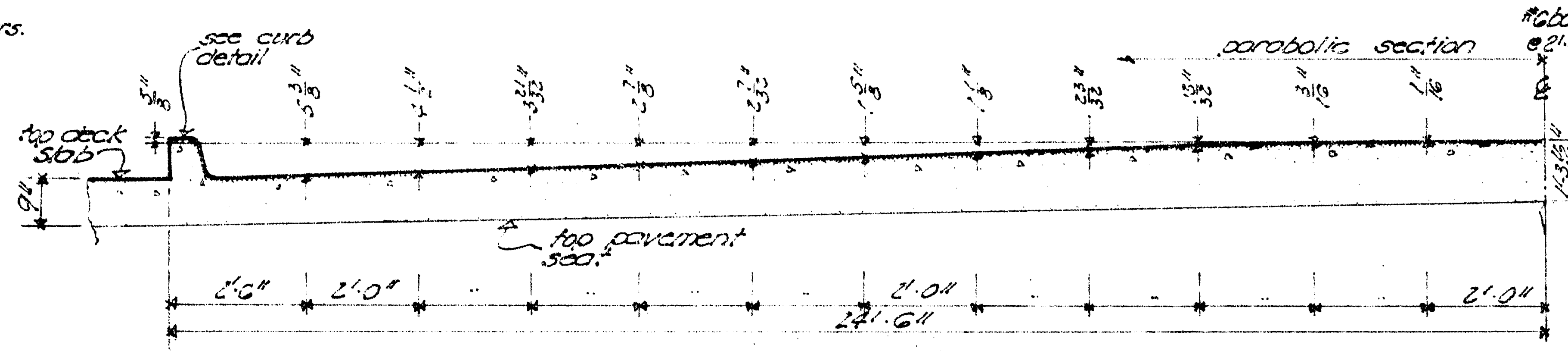
see curb detail
top deck slab
parabolic section
5 3/8"
1 1/2"
21/32"
7/16"
7/32"
5/16"
1/8"
23/32"
13/32"
3/16"
1/16"
℄
9"
1'-3 1/2"
top pavement seat
2'-6"
2'-0"
2'-0"
2'-0"
24'-6"

• TYPICAL SLAB CROWN DETAIL •

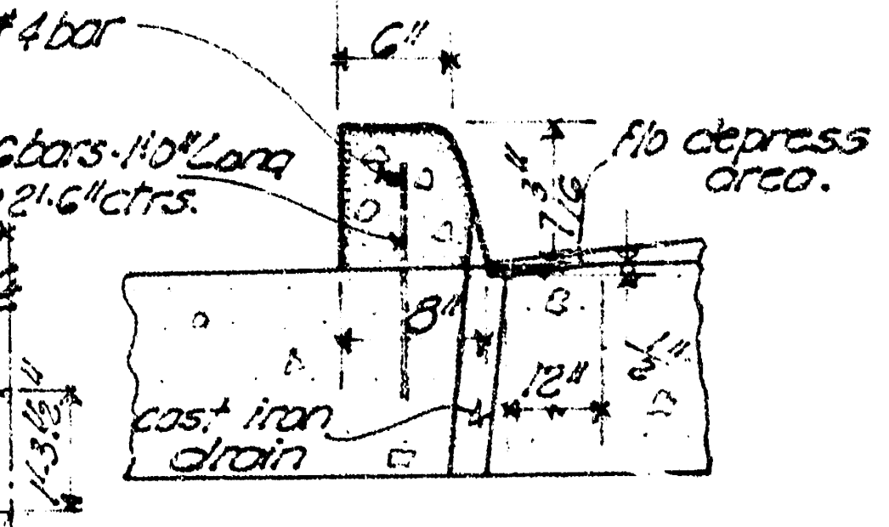
24'-6" to ℄
#4 bar
6"
#6 bars - 1'-0" Long @ 2'-6" ctrs.
Fl. to depress area.
3/4"
7/16"
8"
12"
cast iron drain

• REINF. CURB DETAIL •

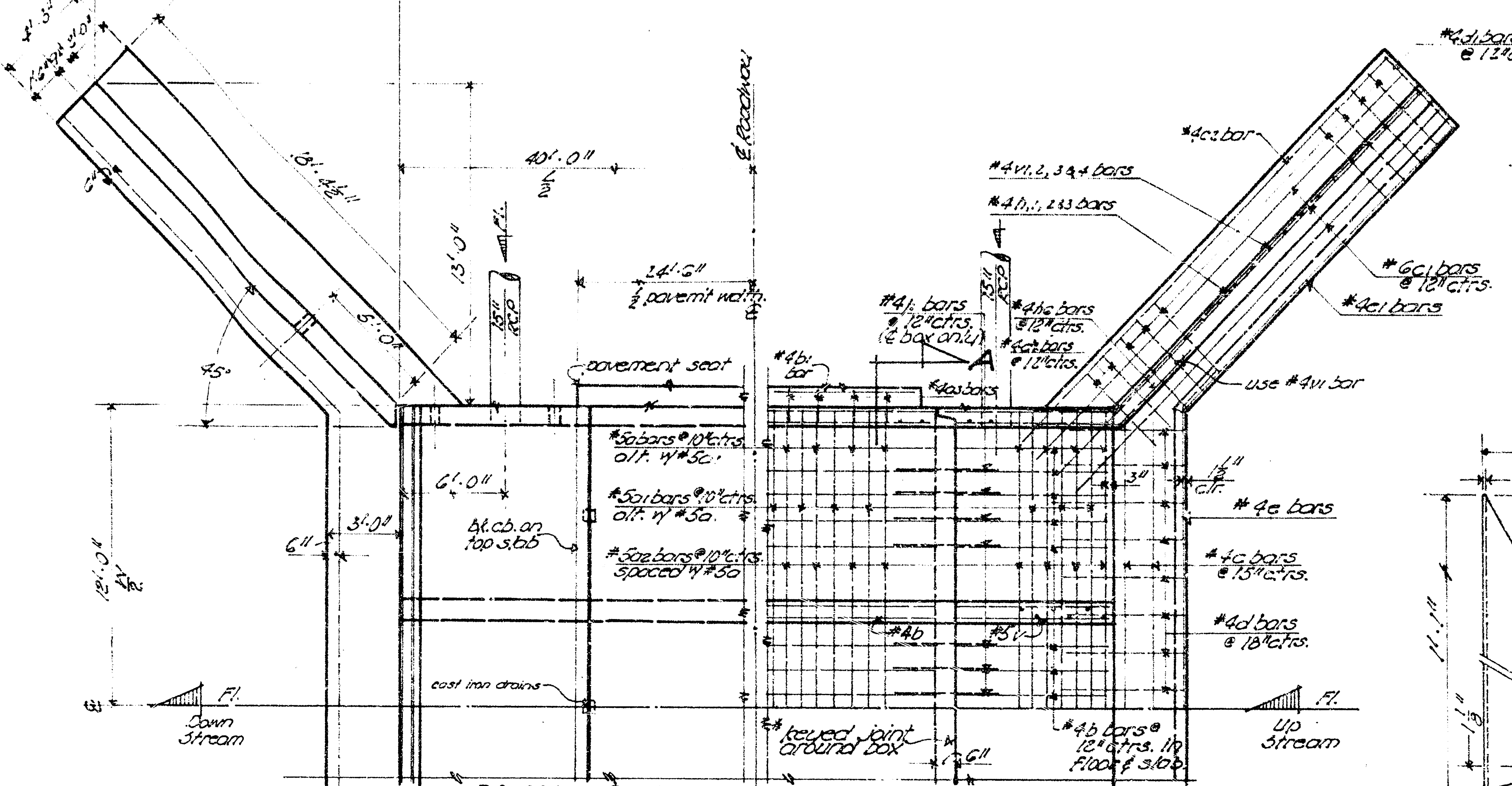
13'-0"
4'-3"
18'-4 1/2"
6"
40'-0"
℄ Roadway
13'-0"
6'-0"
45°
15" R.C.P.
Fl.
24'-6" ½ pavem't width
pavement seat
#4b1 bar
#4l bars @ 12"ctrs. (℄ box only)
A
15" R.C.P.
#4h6 bars @ 12"ctrs.
#4c2 bars @ 12"ctrs.
#4a3 bars
#4d1 bars @ 12"ctrs.
#4c2 bar
#4v1, 2, 3 & 4 bars
#4h, 1, 2 & 3 bars
#6c1 bars @ 12"ctrs.
#4e1 bars
use #4v1 bar
#5a bars @ 10"ctrs. alt. w/ #5a1
#5a1 bars @ 10"ctrs. alt. w/ #5a
#5a2 bars @ 10"ctrs. spaced w/ #5a
6'-0"
3'-0"
6"
12'-0"
Bl. cb. on top slab
1 1/2" clr.
3"
#4e bars
#4c bars @ 15"ctrs.
#4d bars @ 18"ctrs.
#4b
#5v
cast iron drains
Fl. Down Stream
Fl. Up Stream
keyed joint around box
6"
#4b bars @ 12"ctrs. in Floor & slab

• PLAN & SECTION •

scale: 1/4" = 1'-0"

*use (1) joint @ ℄ box.

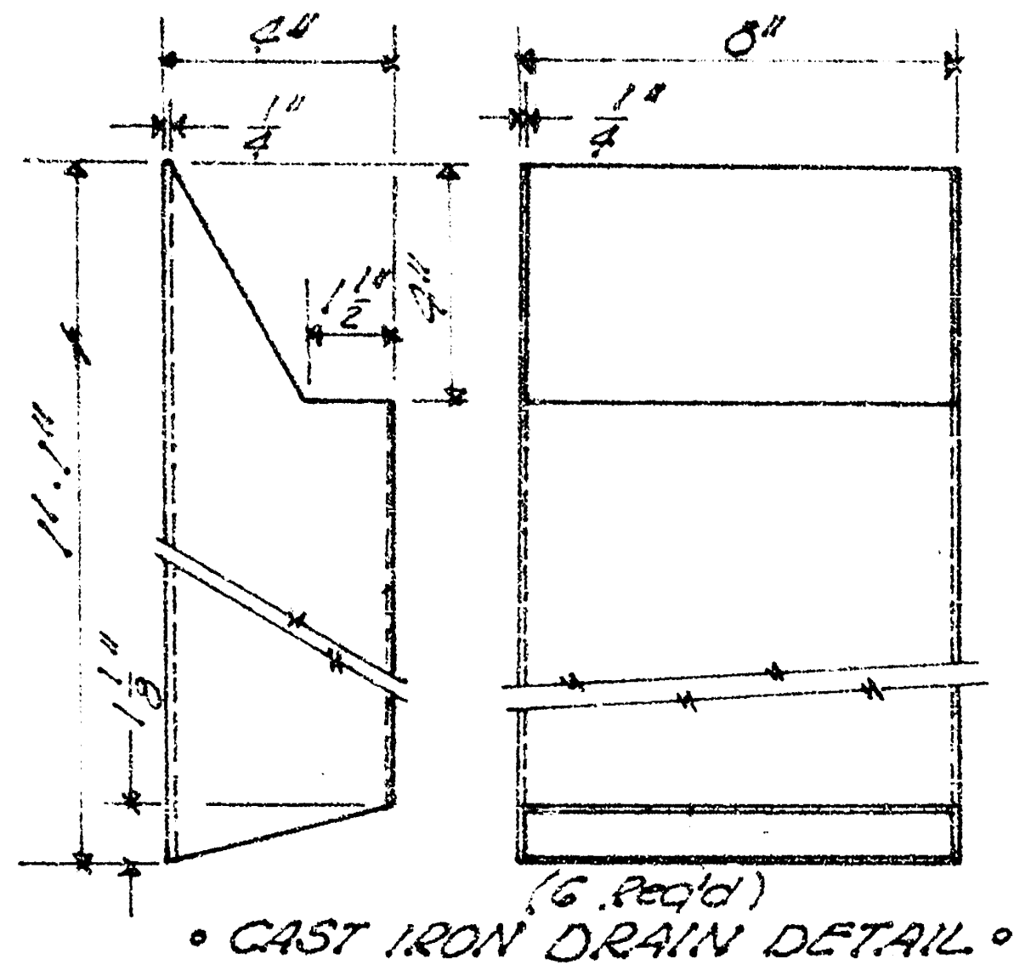
4"
1/4"
8"
1/4"
1 1/2"
2"
1'-1"
1 1/8"
(6 Req'd)

• CAST IRON DRAIN DETAIL •

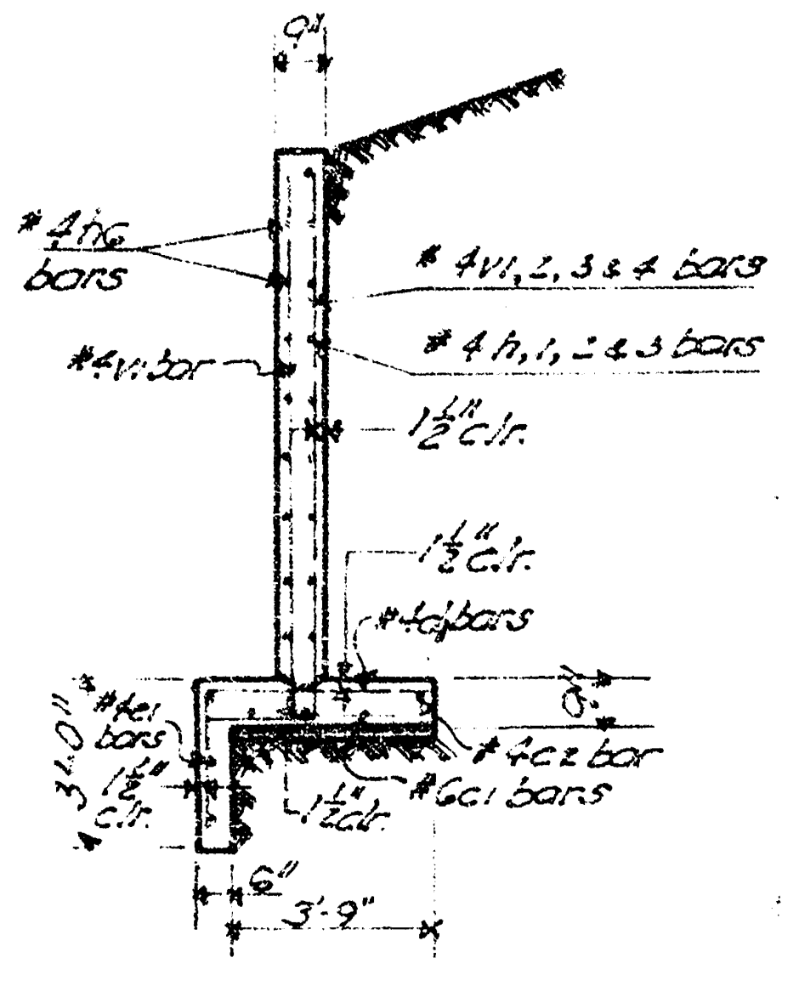
9"
#4h6 bars
#4v1 bar
#4v1, 2, 3 & 4 bars
#4h, 1, 2 & 3 bars
1 1/2" clr.
1 1/2" clr.
#4d bars
#4e1 bars
1 1/2" clr.
3'-0"
#4c2 bar
#6c1 bars
6"
3'-9"

• SECTION THRU WING •

scale: 1/4" = 1'-0"

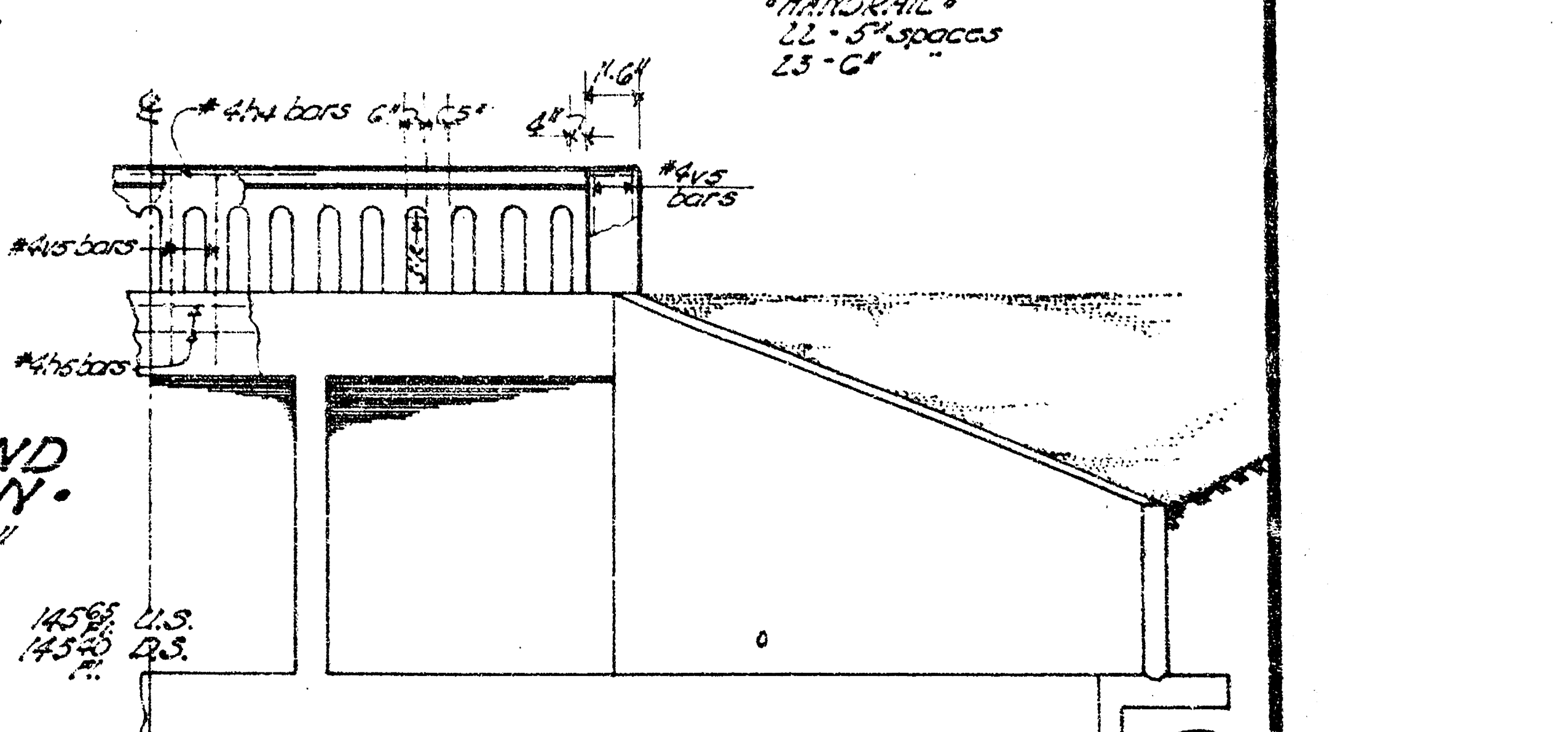
• HANDRAIL •
22 - 5" spaces
23 - 6"
℄
#4h4 bars
1'-6"
4"
#4v5 bars
#4v5 bars
#4h5 bars
145.65 Fl. U.S.
145.40 Fl. D.S.

• HALF - END SECTION •

scale 1/4" = 1'-0"

• DETAIL SHEET • C/G-79

2/5

BAR SCHEDULE

bar	size	length	number	location	shape	spacing	weight
a	#5	25'-9"	192	box	—	10"	4756.08
a1	#5	25'-0"	190	"	∿	"	4954.25
a2	#5	23'-9"	192	"	—	10"	4755.08
a3	#4	21-5"	96	"	⊓	12"	160.32
b	#4	39'-3"	200	"	—	12"	5243.80
b1	#4	23'-9"	4	"	—	--	63.46
c	#4	23'-0"	4	apron	—	15"	61.46
c1	#6	22'-0"	12	"	—	12"	396.53
c2	#4	22'-0"	4	"	—	--	58.78
d	#4	7'-6"	32	"	—┐	12"	160.32
d1	#4	6'-6"	68	"	—┐	"	295.26
d2	#4	4'-0"	8	"	—	"	21.38
e	#4	28'-0"	6	"	⁀	"	112.22
e1	#4	16'-0"	12	"	—	"	128.26
h	#4	19'-2"	8	wingwall	—	"	102.43
h1	#4	8'-6"	3	"	—/	"	45.42
h2	#4	12'-9"	8	"	—/	"	68.14
h3	#4	20'-3"	16	"	—/	12"	216.43
h4	#4	23'-9"	2	handrail	—	--	31.73
h5	#4	23'-9"	4	hubguard	—┘	7"	63.46
h6	#4	7'-0"	32	wingwall	—/	12"	149.63
k	#4	3'-0"	76	box	—	"	152.30
v	#5	8'-11"	320	"	—┘	"	2976.04
v1	#4	10'-3"	24	wingwall	—┘	"	164.33
v2	#4	8'-5"	20	"	—┘	"	112.45
v3	#4	7'-9"	16	"	—┘	12"	82.83
v4	#4	6'-5"	16	"	—┘	12"	68.58
v5	#4	6'-5"	96	hubguard	—┘	11"	411.49
v6	#4	3'-0"	380	box	—	10"	761.52
Reinforcement in conc. curb							30.04

BILL OF MATERIALS

item	quantity	unit	
class A-AE Concrete	213.80	C.Y.	Lump Sum Bid
reinforcing steel	26,605	LBs	
concrete handrail	48	L.F.	
hand excavation	5	C.Y.	
2x5 brick inlets	10	ea.	Bid Items
15" reinf. concrete pipe	410	L.F.	
common excavation	420	C.Y.	
compacted fill	350	C.Y.	
class A concrete	21.42	C.Y.	

° GENERAL NOTES °

° CLASS A-AE Concrete ° shall be used throughout this project. All reinforcing steel shall conform to A.S.T.M. specifications.

° EARTHWORK ° all earthwork shall be considered as "Common Excavation" except for the toewall. Toewall Excavation shall be included in "Lump Sum Bid."

° BACKFILL ° shall be compacted to the bottom of new pavement grade. All backfill and excavation to extend to (2') beyond sides of box & wingwalls.

° WEEP HOLES ° Coarse aggregate shall be deposited behind each weephole to occupy a space extending (15") in all directions above weep-hole flo-line. This work shall not be paid for directly, but shall be considered a part of the excavation work.

° SEAL COURSE ° A seal course consisting of (3") Class A concrete shall be constructed only where specified on the plans or by the Engineer. No reinforcing shall be placed until the seal course has gained sufficient strength to permit working upon it without injury.

° BIDDING OF CULVERT ° the culvert shall be bid as a "Lump Sum Bid" except for the following items: Cu.yds. common excavation, cu.yds. compacted fill, class A concrete, L.ft. 15" R.C.P., 2x5 brick inlets.

The quantities shown in the "BILL OF MATERIALS" or items which are included in the "LUMP SUM BID" of the culvert are for "INFORMATION PURPOSES ONLY". The Contractor must satisfy himself to the "quantities" and the Engineer assumes no responsibility for their accuracy. The Contractor will have the full responsibility for providing all materials shown on the detailed plans necessary to complete this project.

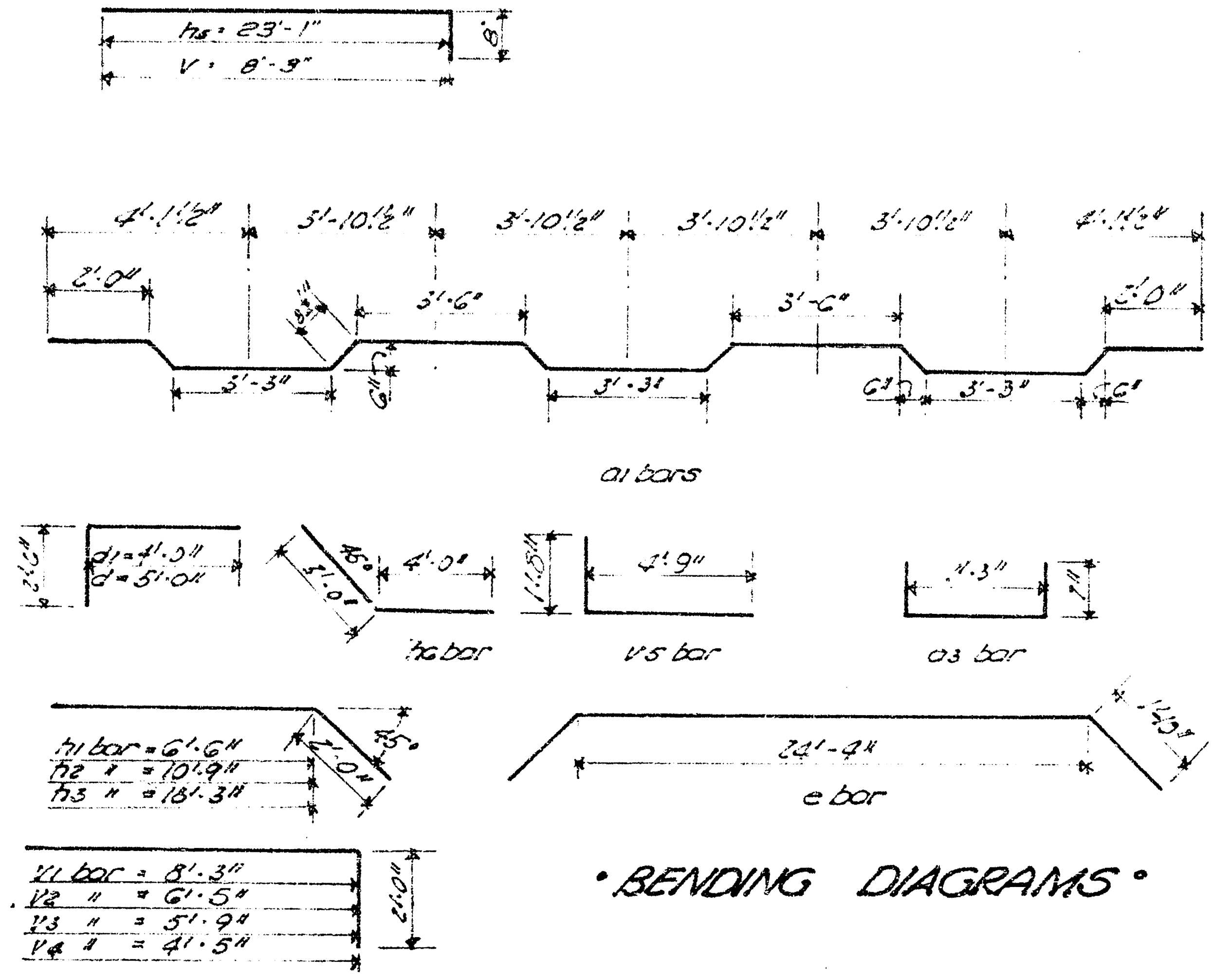

° BENDING DIAGRAMS °

C16-79

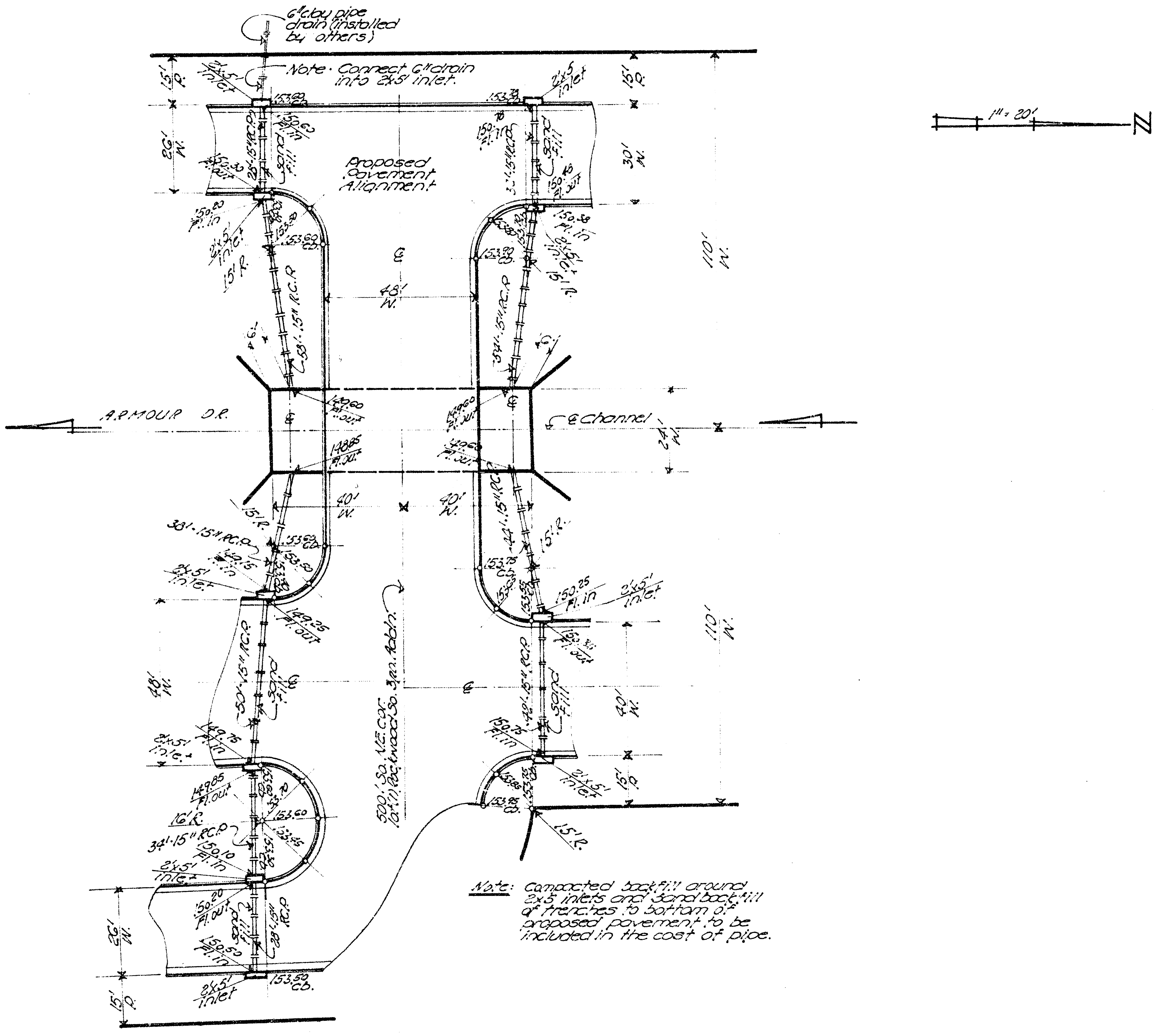
6" clay pipe drain (installed by others)
2'x5' inlet
153.60 Cb.
15' P.
26' W.
25'-15" R.C.P.
150.60 Fl. in
sand fill
150.30 Fl. out
Proposed Pavement Alignment
150.80 Fl. in
2'x5' inlet
15' R.
153.60 Cb.
153.30
℄
48' W.
38'-15" R.C.P.
6'
149.60 Fl. out
148.85 Fl. out
ARMOUR DR.
40' W.
15' R.
38'-15" R.C.P.
150.15 Fl. in
2'x5' inlet
149.25 Fl. out
50'-15" R.C.P.
sand fill
48' W.
149.75 Fl. in
2'x5' inlet
149.85 Fl. out
16' R.
153.60
153.45
34'-15" R.C.P.
150.10 Fl. in
2'x5' inlet
150.20 Fl. out
sand fill
28'-15" R.C.P.
150.50 Fl. in
2'x5' inlet
153.50 Cb.
26' W.
15' P.
500' So. N.E. Cor. 10th St. Rockwood So. 3rd Addn.
2'x5' inlet
153.70
15' P.
150.70 Fl. in
30'-15" R.C.P.
sand fill
30' W.
150.45 Fl. out
150.48 Fl. in
19'-15" R.C.P.
153.90 Cb.
110' W.
34'-15" R.C.P.
6'
149.60 Fl. out
149.65 Fl. out
℄ Channel
24' W.
40' W.
44'-15" R.C.P.
15' R.
153.75 Cb.
153.55 Cb.
150.25 Fl. in
2'x5' inlet
150.35 Fl. out
110' W.
℄
49'-15" R.C.P.
sand fill
40' W.
150.75 Fl. in
2'x5' inlet
15' P.
153.85
153.75 Cb.
153.95 Cb.
15' R.
1" = 20'
N

Note · Connect 6" drain into 2x5' inlet.

Note: Compacted backfill around 2x5 inlets and sand backfill of trenches to bottom of proposed pavement to be included in the cost of pipe.

4/5

•INCIDENTAL DRAINAGE•

in connection with 3-7x7x80, R.C.B.C.

CIG-79

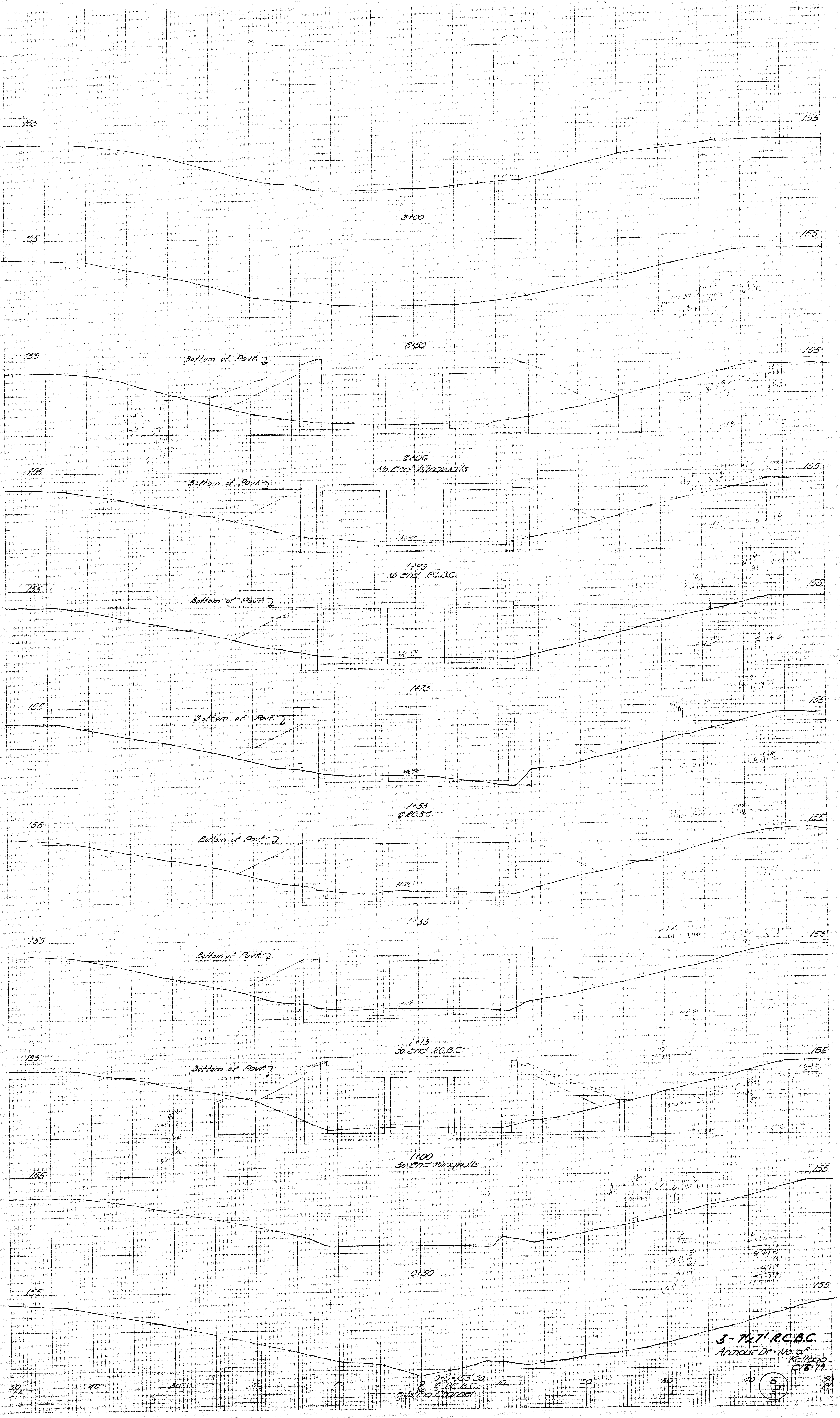
155
3+00
155
2+50
Bottom of Pavt.
2+06
No. End Wingwalls
Bottom of Pavt.
1+93
No. End R.C.B.C.
Bottom of Pavt.
1+73
Bottom of Pavt.
1+53
℄ R.C.B.C.
Bottom of Pavt.
1+33
Bottom of Pavt.
1+13
So. End R.C.B.C.
Bottom of Pavt.
1+00
So. End Wingwalls
0+50
0+0 = 153' So.
& ℄ R.C.B.C.
Existing Channel
50 Lt.
40
30
20
10
0
10
20
30
40
50 Rt.

3-7'x7' R.C.B.C.
Armour Dr. No. of Kellogg
C18-79

5/5

KEUFFEL & ESSER CO. MADE IN U.S.A.
K+E STANDARD CROSS SECTION