B.M. "X" cut on KGSE Manhole Ring 42'± N. and 9'± W. of SE Cor. Lot 4 Spencer Gardens 2nd Addition
Elev. 116.66 City of Wichita Datum

STATE	PROJECT NO.	FISCAL YEAR	SHEET NO.	TOTAL SHEETS

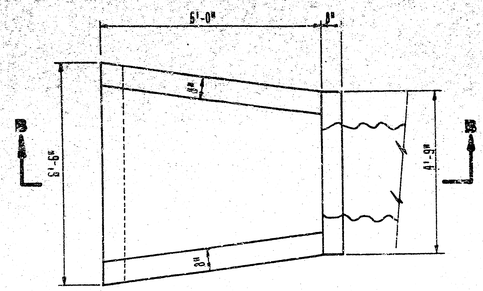

PLAN

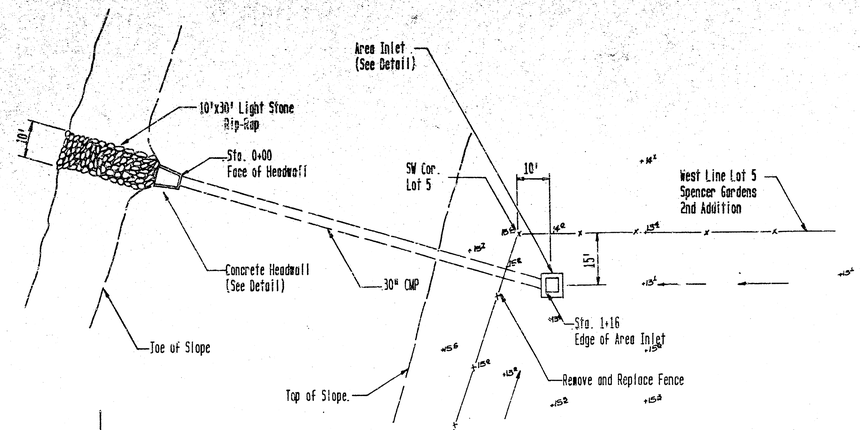

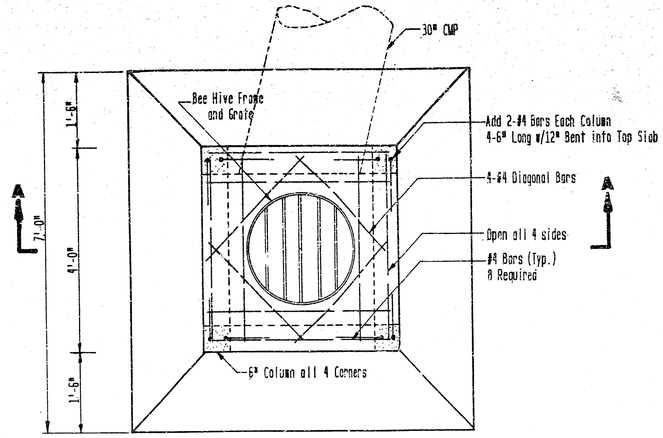

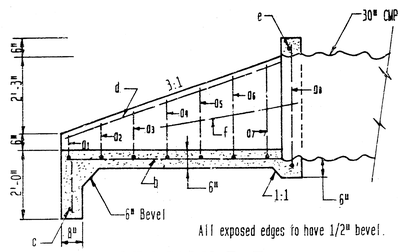

All exposed edges to have 1/2" bevel.

SECTION B-B

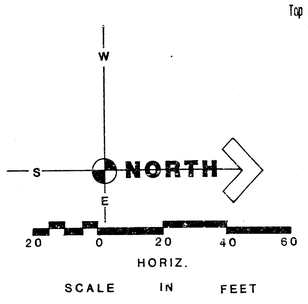

APPROVED AS NOTED
By CITY ENGINEER OF WICHITA

Sanitary Sewers _____
Storm Sewers VRH 1/3/89
Driveways, Approaches _____
Water Mains _____
Paving _____

PLAN

NOTE TO CONTRACTOR

INSPECTION AND TESTING FOR THIS PROJECT IS TO BE PROVIDED BY A LICENSED CONSULTING ENGINEERING FIRM UNDER CONTRACT WITH THE CITY ENGINEER. [illegible] PERFORMED [illegible] PUBLIC RIGHT-OF-WAY BY THE PUBLIC [illegible] WITHOUT SUCH INSPECTION OR TESTING. [illegible] DEDICATED EASEMENTS OR PUBLIC RIGHT-OF-WAY WITHOUT WRITTEN AUTHORIZATION BY THE CITY ENGINEER.

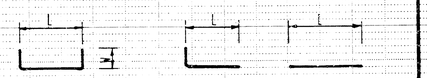

BAR	L	W	NUMBER	SIZE
a1	5'-8"	8"	1	#4
a2	5'-6"	11"	1	#4
a3	5'-3"	1'-3"	1	#4
a4	5'-0"	1'-7"	1	#4
a5	4'-8"	1'-11"	1	#4
a6	4'-6"	2'-3"	1	#4
a7	4'-3"	2'-7"	1	#4
a8	4'-1"	3'-6"	1	#4
b	7'-0"	1'-6"	7	#4
c	6'-0"	-	1	#4
d	7'-6"	-	2	#4
e	4'-5"	-	1	#4
f	4'-3"	-	2	#4

CONCRETE HEADWALL DETAILS

SCALE 1/2" = 1'-0"

PROFILE

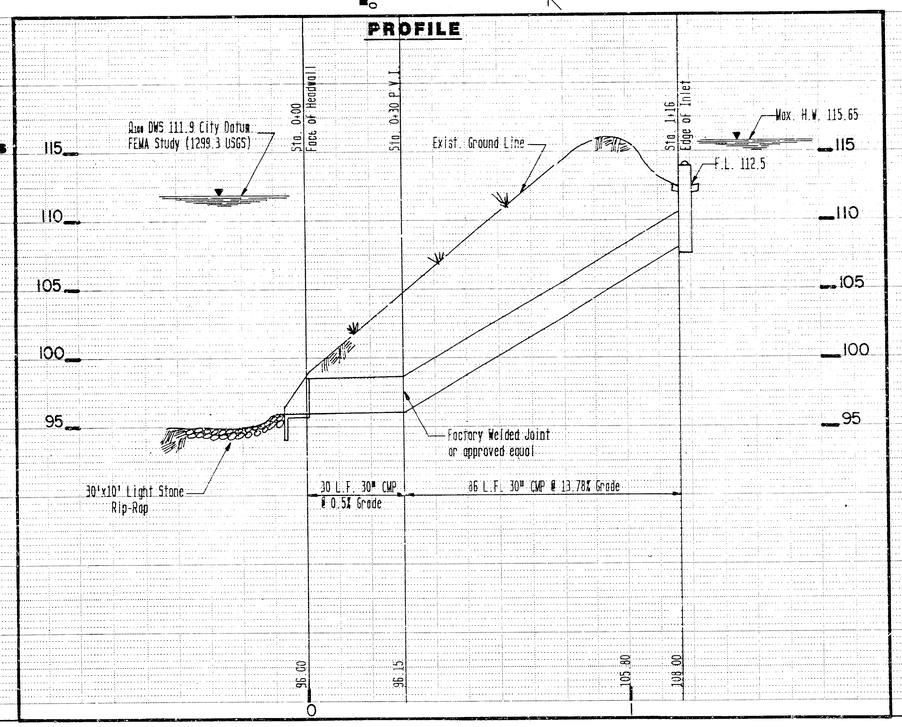

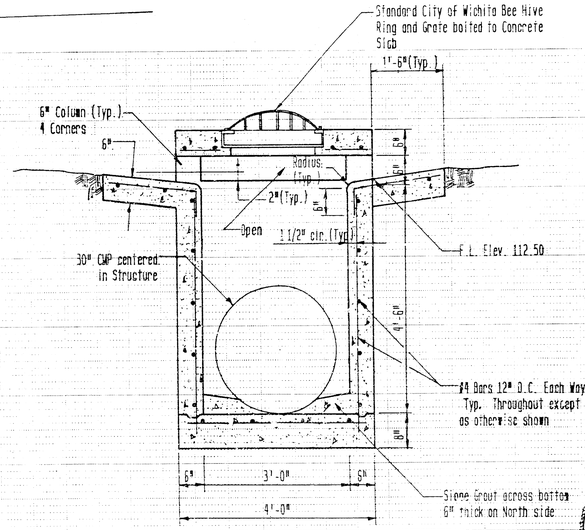

SECTION A-A

AREA INLET

SCALE 3/4" = 1'-0"

KENNY E. HILL
LICENSED
7690
KANSAS
PROFESSIONAL ENGINEER

POE & ASSOCIATES OF KANSAS INC.
CONSULTING ENGINEERS
434 N. Oliver, Suite 110 ■ Wichita KS 67208 ☎ 316/685-4174

ENGINEER K.H.	Spencer Gardens 2nd Addition To CITY OF WICHITA, KANSAS
ENG. TECH	
DRAWN BY T.E.B.	
DATE DEC. 1988	
SHEET 1 OF 1	PROJECT NO. 468-76-245-80001-000-000-199

PLAN — SURVEYED, PLOTTED, ALIGNMENT CHECKED, RT. OF WAY CHECKED, NOTE BOOK, NO., BY, DATE

PROFILE — SURVEYED, PLOTTED, GRADES CHECKED, B.M. NOTED, STRUCTURE NOTAT'N CHECKED, NOTE BOOK, NO., BY, DATE

FILMED FROM THE BEST AVAILABLE COPY ....