BENCHMARKS:
BM #1: C.O.W. benchmark disk. 56' E and 55' N of CL 135th St. W. & 13th St. N. Elev. = 167.83 (City Datum)

BM #2: RR spike in east face of power pole 1/4 mile S & 31' E of intersection of 135th St. W. &13th ST. N. Elev. = 170.85 (City Datum)

BM #3: "□" cut in top of curb N end of W curb return of Forest View & Forest View Ct. Elev. = 165.07 (City Datum)

Scale: 1" = 20'
• = Iron

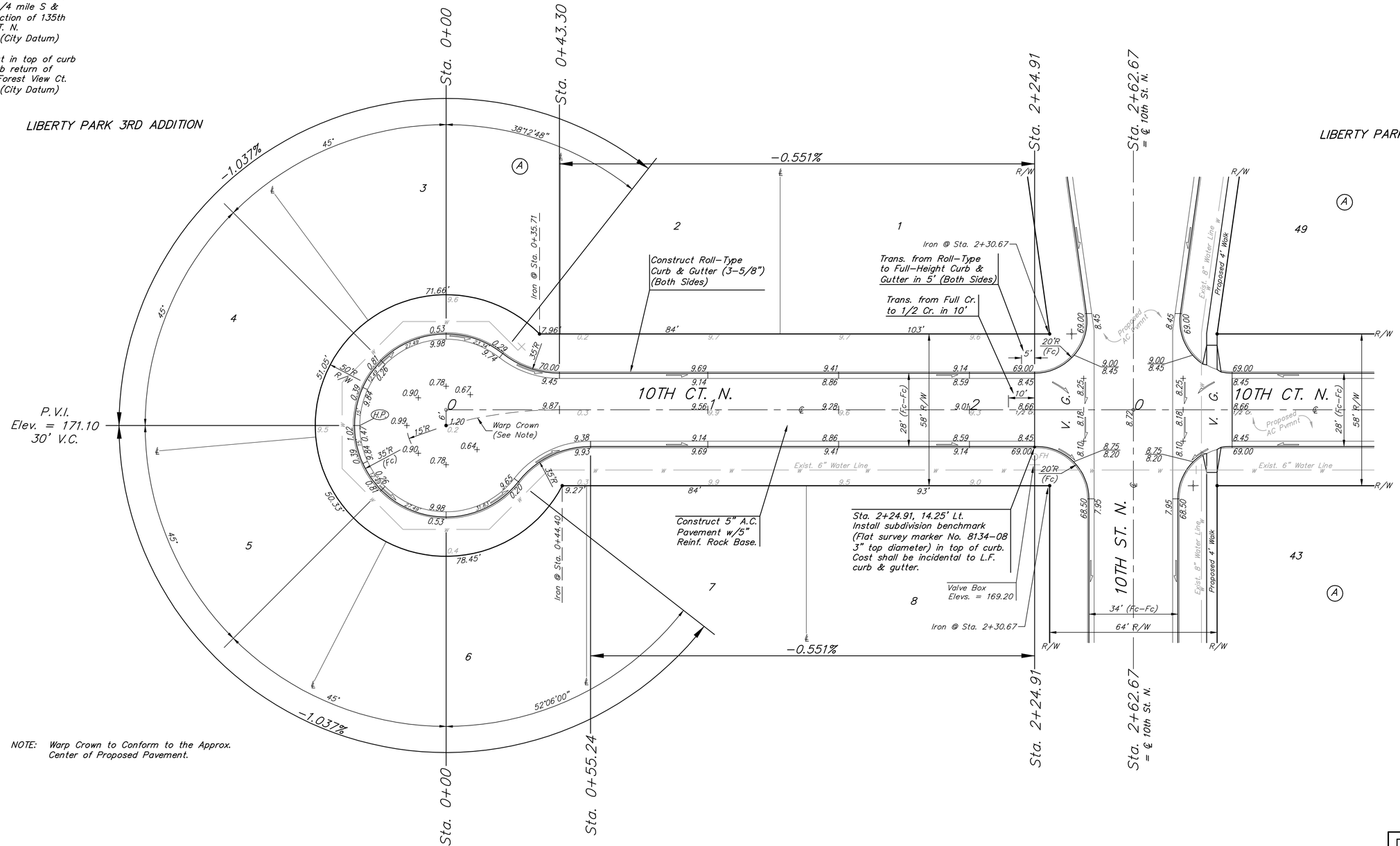

NOTE: Warp Crown to Conform to the Approx. Center of Proposed Pavement.

Roll type curb & gutter to be constructed on the pavement on this sheet.
Top of curb elevation are given for full height curb.

Baughman

Liberty Park 2nd & 3rd Addition - Phase I
10TH CT NORTH
Lots 1-8, Block A

Baughman Company, P.A. 315 Ellis St. Wichita, KS 67211 P 316-262-7271 F 316-262-0149
ENGINEERING | SURVEYING | PLANNING | LANDSCAPE ARCHITECTURE

PROJECT NUMBER 472-83881	DESIGN NBW/JAK · DRAWN JAK
REVISIONS:	APPROVED NBW · DATE 4/19/06
	SCALE Noted
	SHEET **8** OF **53**

E:Eng\Liberty Park 3rd\Phase 1\Str2 03-09-E701