FINAL PLAT

LEGACY PARK WILSON ESTATES 3RD ADDITION

AN ADDITION TO WICHITA, SEDGWICK COUNTY, KANSAS

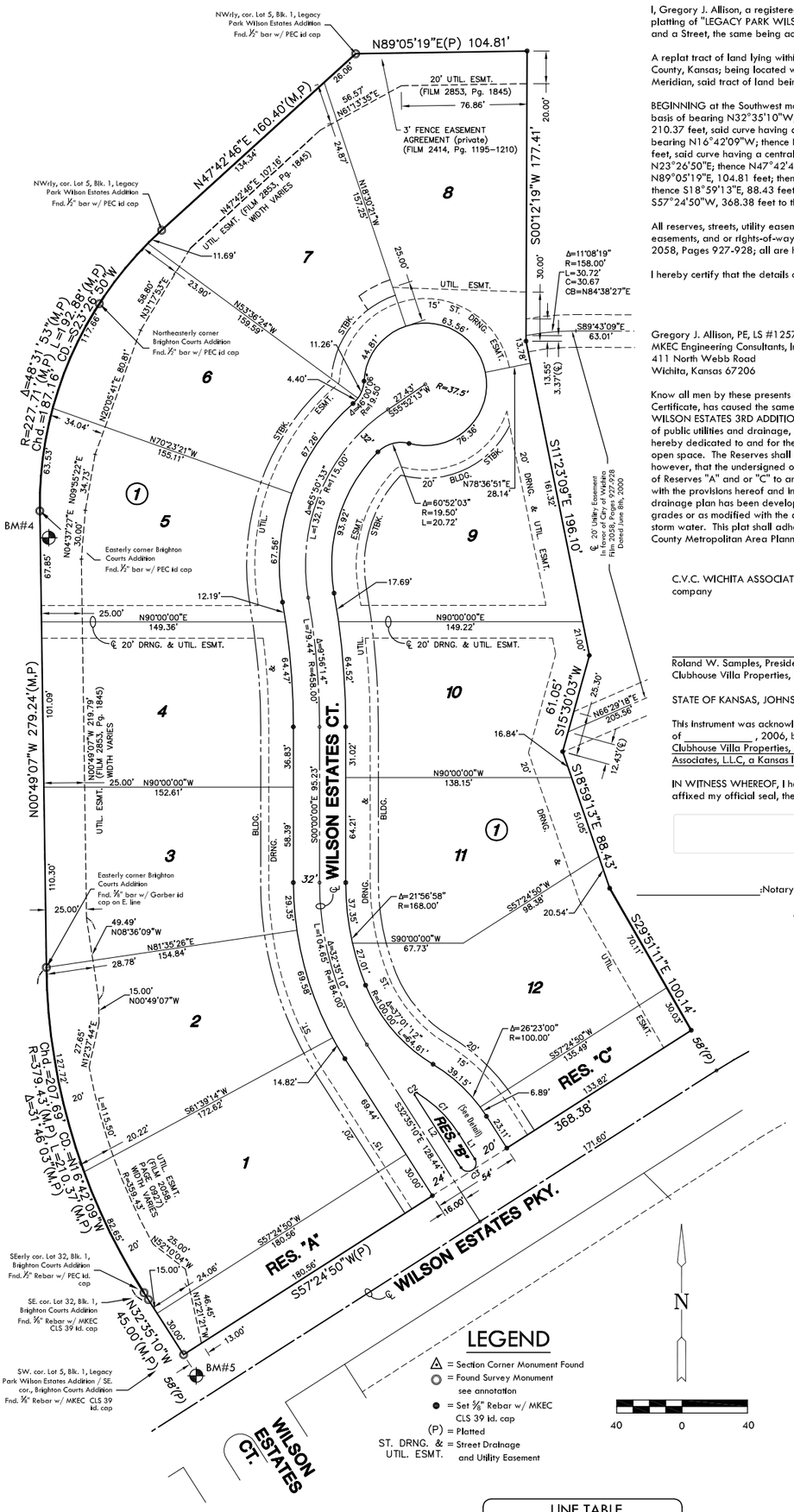

LEGEND

△ = Section Corner Monument Found
◎ = Found Survey Monument see annotation
● = Set ⅝" Rebar w/ MKEC CLS 39 id. cap
(P) = Platted
ST. DRNG. & UTIL. ESMT. = Street Drainage and Utility Easement

LINE TABLE		
LINE	LENGTH	BEARING
L1	18.11'	N32°35'10"W
L2	52.75'	S32°35'10"E

CURVE TABLE			
CURVE	LENGTH	RADIUS	DELTA
C1	36.31'	80.00'	26°00'28"
C2	2.69'	1.00'	153°59'32"
C3	15.71'	5.00'	180°00'00"

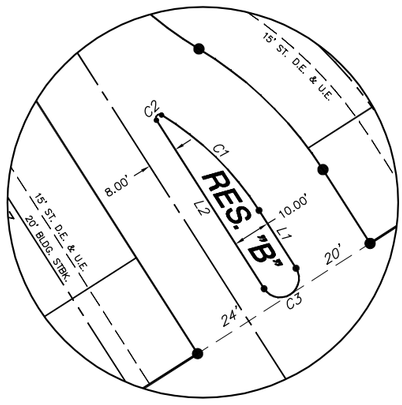

RESERVE "B" DETAIL

BENCH MARKS

BM#4 - "□" Cut Top of RCB End Section at SE Cor. of Lot 23, Blk. 1, Brighton Courts Addition. Elev.= 197.07

BM#5 - "□" Cut Top of Curb on the N. side of Wilson Estates Parkway at SE. Cor. of Brighton Courts Addition. Elev.= 199.40

I, Gregory J. Allison, a registered land surveyor in Kansas, do hereby certify that I have been in responsible charge of surveying and platting of "LEGACY PARK WILSON ESTATES 3RD ADDITION," an addition to Wichita, Sedgwick County, Kansas, into Lots, a Block, and a Street, the same being accurately set forth in the accompanying plat and described herein:

A replat tract of land lying within a Westerly portion of Lot 5, Block 1, Legacy Park Wilson Estates Addition, to Wichita, Sedgwick County, Kansas; being located within the Northeast Quarter, Section 8, Township 27 South, Range 2 East, of the Sixth Principal Meridian, said tract of land being more particularly described as follows:

BEGINNING at the Southwest most corner of said Lot 5, thence along the Westerly line of said Lot 5 for the next 5 courses on a platted basis of bearing N32°35'10"W, 45.00 feet to a point on a curve to the right; thence along the said curve and said Westerly line 210.37 feet, said curve having a central angle of 31°46'03", a radius of 379.43 feet, and a long chord distance of 207.69 feet, bearing N16°42'09"W; thence N00°49'07"W, 279.24 feet to a point on a curve to the right; thence along the said curve 192.88 feet, said curve having a central angle of 48°31'53", a radius of 227.71 feet, and a long chord distance of 187.16 feet, bearing N23°26'50"E; thence N47°42'46"E, 160.40 feet to a Northwest corner of said Lot 5; thence along the North line of said Lot 5, N89°05'19"E, 104.81 feet; thence S00°12'19"W, 177.41 feet; thence S11°23'09"E, 196.10 feet; thence S15°30'03"W, 61.05 feet; thence S18°59'13"E, 88.43 feet; thence S29°51'11"E, 100.14 feet to the South line of said Lot 5; thence along said South line, S57°24'50"W, 368.38 feet to the POINT OF BEGINNING.

All reserves, streets, utility easements, building setbacks, access control(s); together with any and all other public dedications, easements, and or rights-of-ways lying within the above described property, including a portion of a Utility Easement recorded on Film 2058, Pages 927-928; all are hereby vacated and replatted by virtue of K.S.A. 12-512(b).

I hereby certify that the details of this plat are correct to the best of my knowledge and belief this___day of _____2006.

Gregory J. Allison, PE, LS #1257
MKEC Engineering Consultants, Inc.
411 North Webb Road
Wichita, Kansas 67206

Know all men by these presents that the undersigned property owners of the land above set forth in the Registered Land Surveyor's Certificate, has caused the same to be surveyed and platted into Lots, a Block, and a Street the same to be known as "LEGACY PARK WILSON ESTATES 3RD ADDITION," an addition to Wichita, Sedgwick County, Kansas. Easements for the construction and maintenance of public utilities and drainage, as indicated on the accompanying plat, are hereby granted to and for the use of public. The street is hereby dedicated to and for the use of the public. Reserves "A", "B", and "C", are platted for monuments, landscaping, irrigation, and open space. The Reserves shall be owned and maintained by a homeowner's association and are reserved for uses stated, provided however, that the undersigned or homeowner's association as the undersigned successors in interest may, at its discretion deed a parcel of Reserves "A" and or "C" to an owner(s) of an adjoining lot subject to the obligation to maintain such deeded parcel in compliance with the provisions hereof and in compliance with the maintenance covenants of any applicable restrictive covenants or regulations. A drainage plan has been developed for this plat and all drainage easements, right-of-way, or reserves shall remain at established grades or as modified with the approval of the applicable City or County Engineer, and unobstructed to allow for the conveyance of storm water. This plat shall adhere and conform to the recitals of C.U.P. DP-201 as approved and recorded at the Wichita-Sedgwick County Metropolitan Area Planning Department.

C.V.C. WICHITA ASSOCIATES, L.L.C., a Kansas limited liability company

_____, President
Roland W. Samples, President
Clubhouse Villa Properties, Inc., manager

STATE OF KANSAS, JOHNSON COUNTY} ss:

This instrument was acknowledged before me on ____ day of _____, 2006, by Roland W. Samples, President, Clubhouse Villa Properties, Inc., manager of C.V.C. Wichita Associates, L.L.C, a Kansas limited liability company.

IN WITNESS WHEREOF, I have hereunto set my hand and affixed my official seal, the day and year last above written.

_____:Notary Public
My Term Expires: _____.

SECURITY SAVING BANK, FSB holders, of a mortgage on the above described property, does hereby consent to the plat of "LEGACY PARK WILSON ESTATES 3RD ADDITION."

SECURITY SAVING BANK, FSB

_____, commercial loan officer
Dennis Schamber, commercial loan officer
Security Savings Bank, FSB
12121 E. 21st St. N.
Wichita, KS 67206

STATE OF KANSAS, SEDGWICK COUNTY} ss:

This instrument was acknowledged before me on this_____ day of _____, 2006, by , Dennis Schamber, commercial loan officer, Security Savings Bank, FSB.

IN WITNESS WHEREOF, I have hereunto set my hand and affixed my official seal, the day and year last above written.

_____:Notary Public
My Term Expires: _____.

STATE OF KANSAS, SEDGWICK COUNTY} ss:

This plat of "LEGACY PARK WILSON ESTATES 3RD ADDITION" has been submitted to and approved by the Wichita-Sedgwick County Metropolitan Area Planning Commission, Wichita, Kansas.

Dated this ____ day of _____ , 2006.

WICHITA-SEDGWICK COUNTY METROPOLITAN AREA PLANNING COMMISSION

_____, Chair
Harold L. Warner Jr., Chair

Attest:
_____, Secretary
John L. Schlegel, Secretary

This plat of "LEGACY PARK WILSON ESTATES 3RD ADDITION" has been submitted to and approved by the City Council of the City of Wichita, Sedgwick County, Kansas. The easements, rights-of-way and other public dedications are accepted by the City Council the City of Wichita, Sedgwick County, Kansas. Dated this ____ day of _____ , 2006.

At the direction of the City Council.

_____, Mayor
Carlos Mayans, Mayor

Attest:
_____, City Clerk
Karen Sublett, City Clerk

STATE OF KANSAS, SEDGWICK COUNTY} ss:

Entered on transfer record this ____ day of _____ , 2006

_____, County Clerk
Don Brace, County Clerk

This is to certify that this instrument was filed for record in the Register of Deeds office this ____ day of _____ , 2006, at _____ o'clock _M; and is duly recorded. Fee of $20.00.

DOCUMENT NO.

_____, Register of Deeds
Bill Meek, Register of Deeds

Attest:
_____, Deputy
Tonya E. Buckingham, Deputy

Reviewed in accordance with K.S.A. 58-2005 on this ____ day of _____ , 2006.

_____, Deputy County Surveyor
Tricia L. Robello, LS #1246
Deputy County Surveyor
Sedgwick County, Kansas

MKEC ENGINEERING CONSULTANTS, INC.
411 N. WEBB ROAD
WICHITA, KS. 67206
316 - 684 - 9600

J:\Civil\67573\Dwg\Prop\67573c.dwg 4/10/2006 11:24:47 AM CST