FHWA REG NO.	STATE	PROJECT NO.	YEAR	SHEET NO.	SHEETS
7	KANSAS				

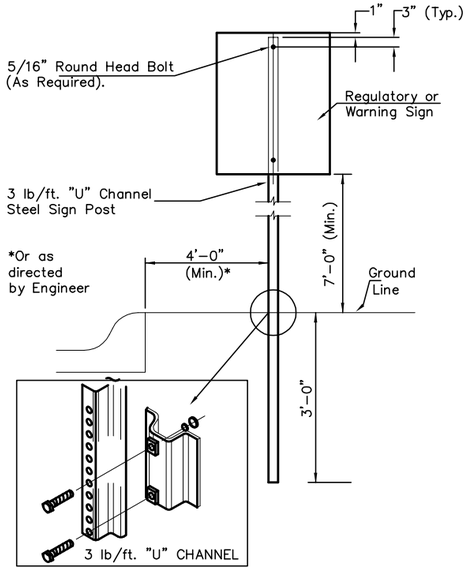

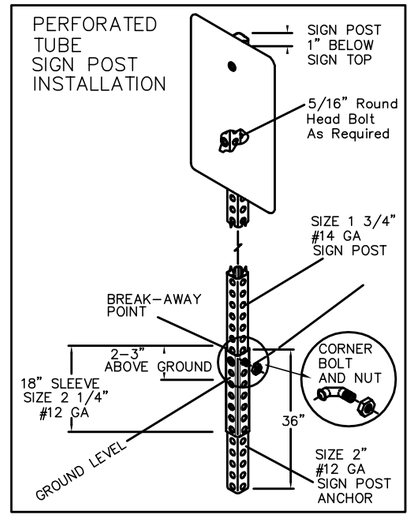

TYPICAL TRAFFIC CONTROL SIGN MOUNTING INSTALLATION

CURB AND GUTTER SECTION

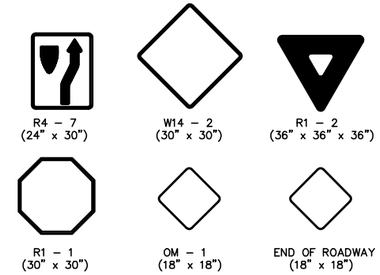

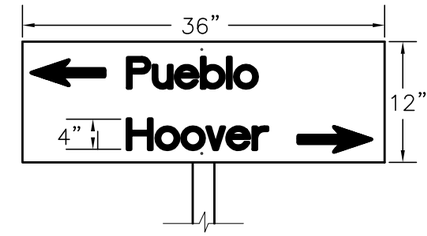

FLAT PLATE STREET NAME SIGN

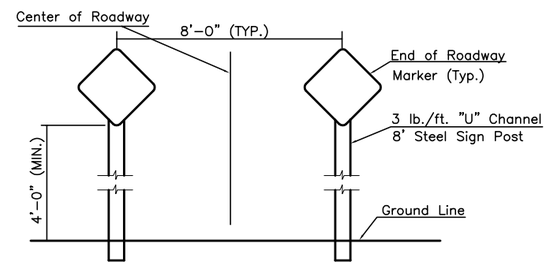

TYPICAL END OF ROADWAY SIGN MOUNTING INSTALLATION

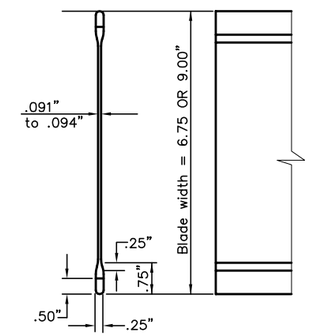

STREET NAME SIGN

BLADE DETAILS

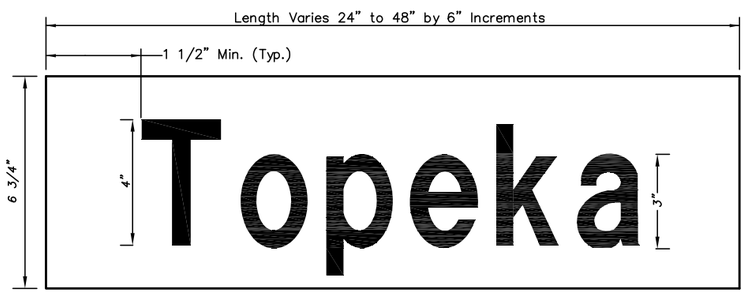

DETAIL A
6 3/4" STANDARD

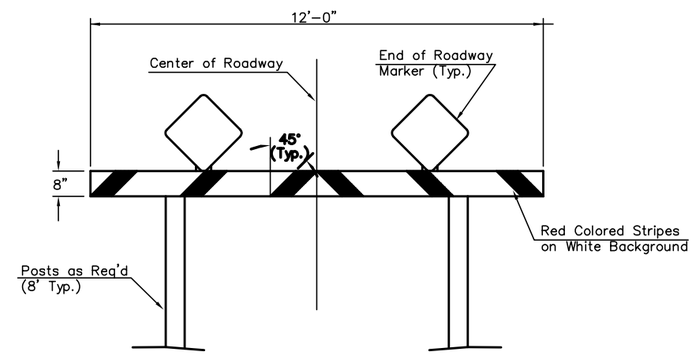

TYPE I BARRICADE DETAIL W/ E.O.R. MARKERS

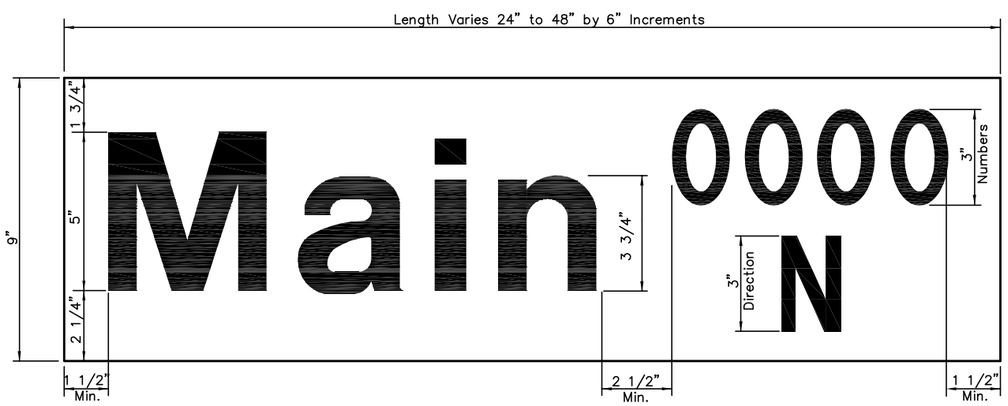

DETAIL B
9" METRO

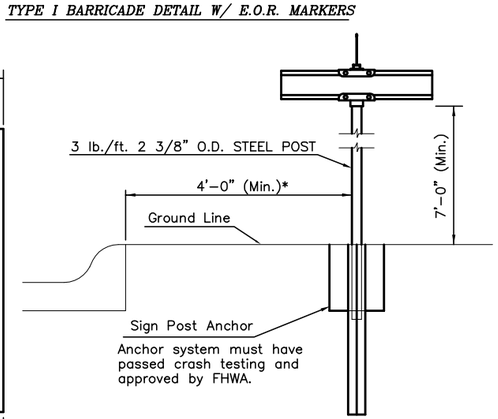

TYPICAL STREET NAME SIGN MOUNTING INSTALLATION

CURB AND GUTTER SECTION

SIGN ASSEMBLY TABLE

STATION	OFFSET	SIGN	QUANTITY*
Michelle			
6+85	5' Lt./Rt.	EOR	1