STATE	PROJECT NO.	YEAR	SHEET NO.	TOTAL SHEETS
KANSAS	54-87 K-6657-01	2002	125	1122

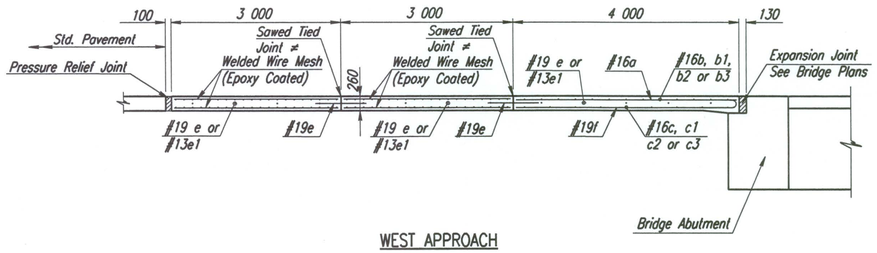

WEST APPROACH

SECTION A-A

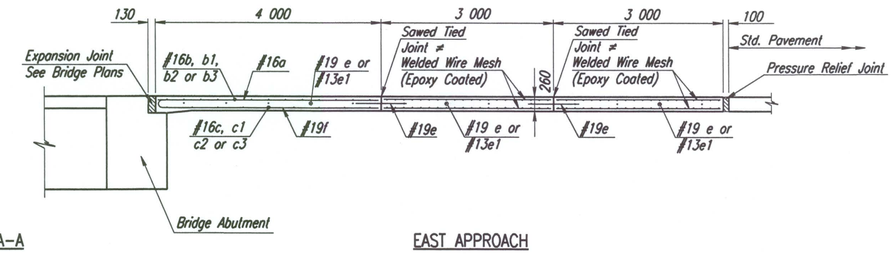

EAST APPROACH

≠ The Contractor has the option of substituting a Tied Keyed Construction Joint for the Sawed Tied Joint shown.

LONGITUDINAL SECTIONS

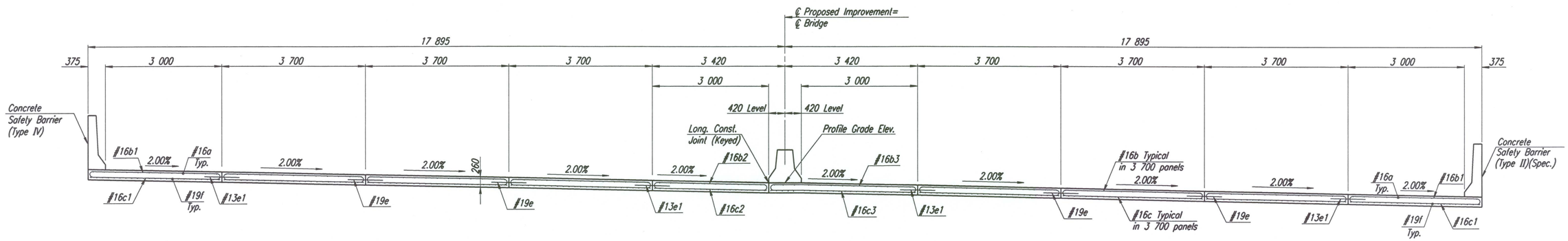

SECTION B-B

TRANSVERSE SECTION

For Concrete Safety Barrier reinforcing details, see Sh. Nos. 228-230
Concrete Safety Barrier shall be reinforced through the entire length of the approach pavement.

No.	Revisions	By	Date
1			

CITY OF WICHITA

CONCRETE BRIDGE APPROACH PAVEMENT
E.B. & W.B. US-54 OVER TYLER ROAD

SEDGWICK COUNTY

Professional Engineering Consultants, P.A.
303 S. TOPEKA • WICHITA, KANSAS 67202
316-262-2691 • FAX 316-262-3003

Designed by	WDH	Checked by	
Drawn by	JGP	Date April, 2002	Job No. 97362

DATE	BY	
	REFERENCES NOTED	
	REFERENCES CHECKED	

DSNR: OPER: JGP SCALE: 1:50
I:/1997/97362/APPROACH SLAB/TYLERSECT.DGN 12-03-2001 14:22:48 LAST REV: 1-19-2002 BY: svb