STATE	PROJECT NO.	YEAR	SHEET NO.	TOTAL SHEETS
KANSAS	54-87 K-6657-01	2002	352	1122

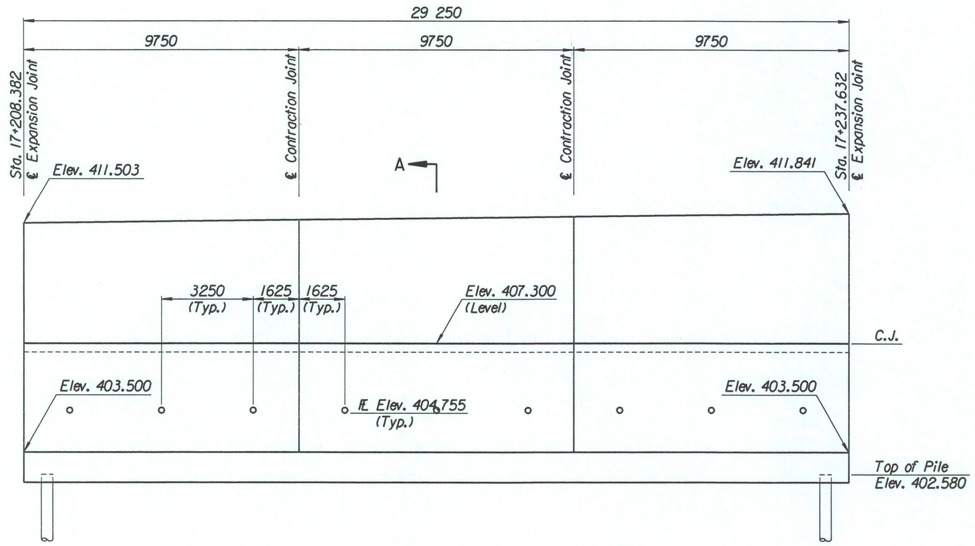

ELEVATION

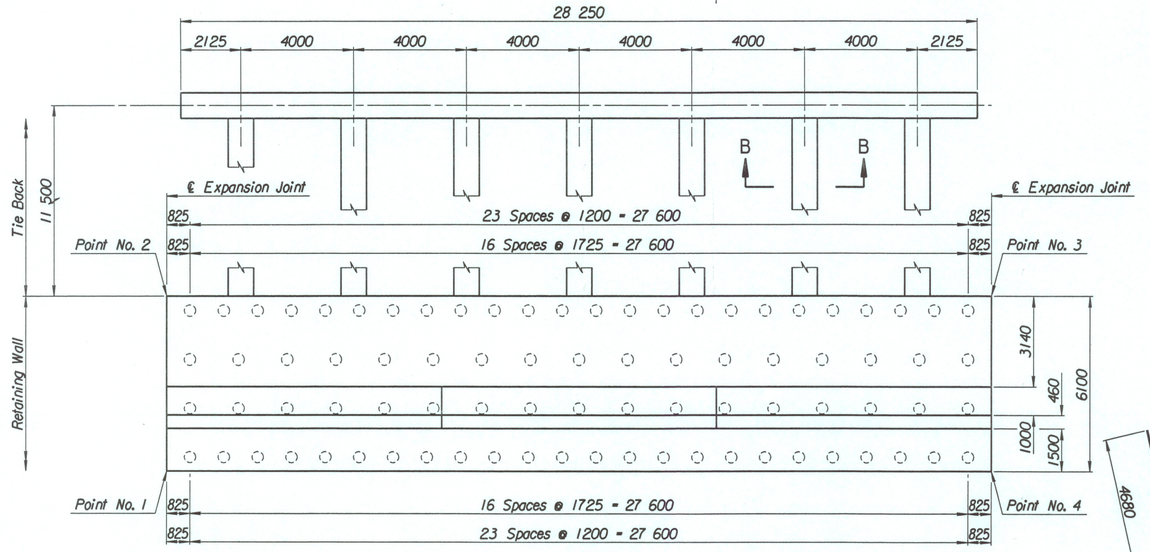

PLAN

TIE BACK REINFORCING STEEL							
Straight Bars				Bent Bars			
Mark	Size	Number	Length	Mark	Size	Number	Length
B8-16	#25	40	15 040	B8-13	#13	259	2740
				B8-14	#29	84	12 000
				B8-15	#13	94	6300

TIE BACK QUANTITIES		
Item	Quantity	Unit
Concrete (Grade 30)(AE)	104.2	m^3
Reinforcing Steel (Grade 420)	8785	kg

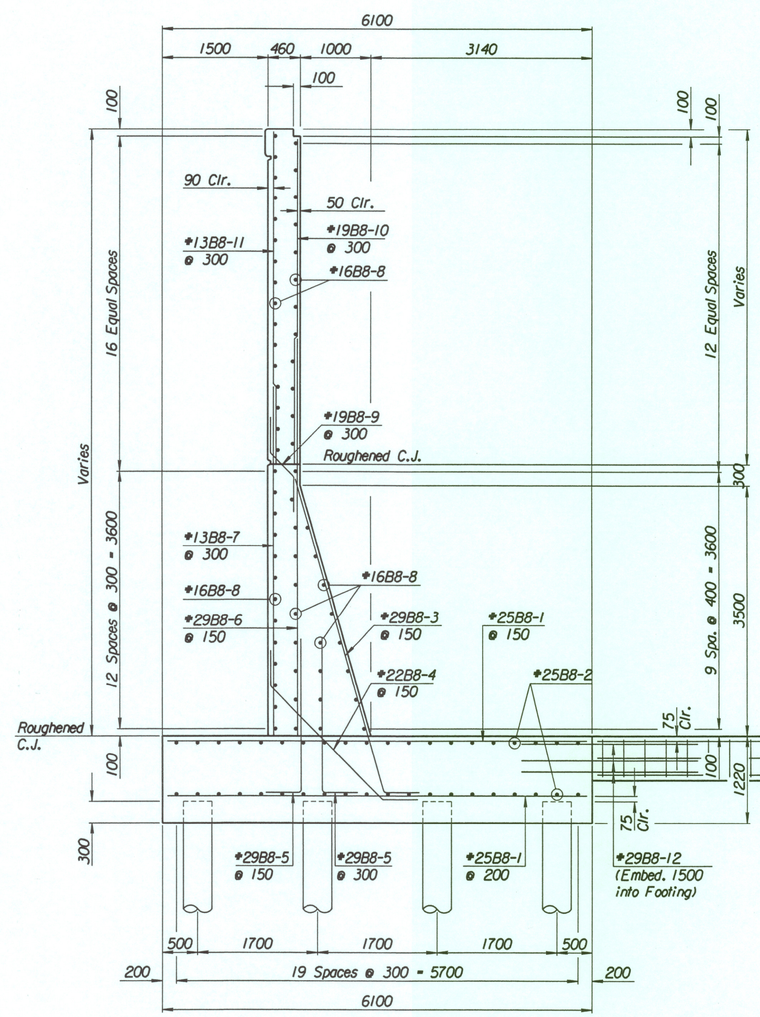

SECTION A-A

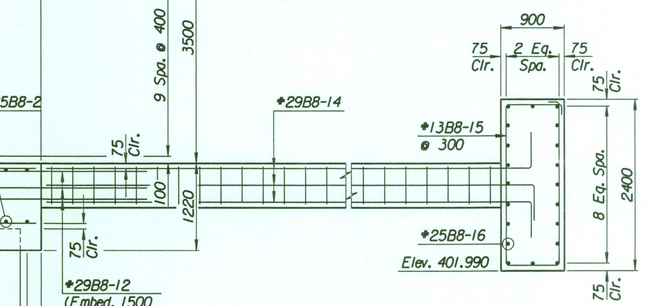

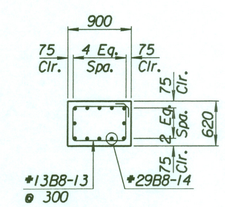

SECTION B-B

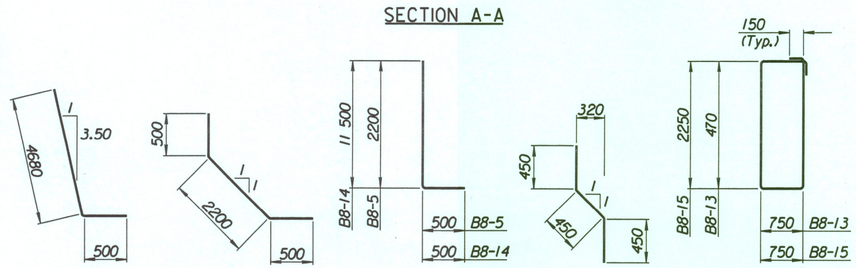

BENDING DIAGRAMS

All dimensions are out to out of bars.

LAYOUT INFORMATION				
Point No.	North Coordinate	East Coordinate	Station	Offset
1	511934.358	493108.000	17+208.382	19.995 Rt.
2	511939.890	493105.430	17+208.382	13.895 Rt.
3	511952.212	493131.958	17+237.632	13.895 Rt.
4	511946.680	493134.528	17+237.632	19.995 Rt.

REINFORCING STEEL							
Straight Bars				Bent Bars			
Mark	Size	Number	Length	Mark	Size	Number	Length
B8-1	#25	342	6020	B8-3	#29	195	5180
B8-2	#25	80	15 540	B8-4	#22	195	3200
				B8-5	#29	294	2700
B8-6	#29	195	5990				
B8-7	#13	99	4750	B8-9	#19	99	1350
B8-8	#16	189	9650				
B8-10	#19	99	4050				
B8-11	#13	99	4150				
B8-12	#29	84	4000				

WALL QUANTITIES		
Item	Quantity	Unit
Pressure Grouted Pile (406 mm)	984.0	m
Concrete (Grade 30)(AE)	378.5	m^3
Reinforcing Steel (Grade 420)	36 657	kg
Class III Excavation	470.5	m^3

No.	Revisions	By	Date
1			

CITY OF WICHITA

TYLER SOUTHWEST WALL

STA. 17+208.382 TO STA. 17+237.632

SEDGWICK COUNTY

Professional Engineering Consultants, P.A.
303 S. TOPEKA • WICHITA, KANSAS 67202
316-262-2691 • FAX 316-262-3003

Designed by	P.D.F.	Checked by	R.A.S.
Drawn by	W.L.L.	Date	April, 2002
Job No.	97362		

Drawn by: wll
Plotted by: drp 3-25-2002
i:/1997/97362/001/bridge/tylerrd/SWwall-2