STATE	PROJECT NO.	YEAR	SHEET NO.	TOTAL SHEETS
KANSAS	54-87 K-6657-01	2002	461	1122

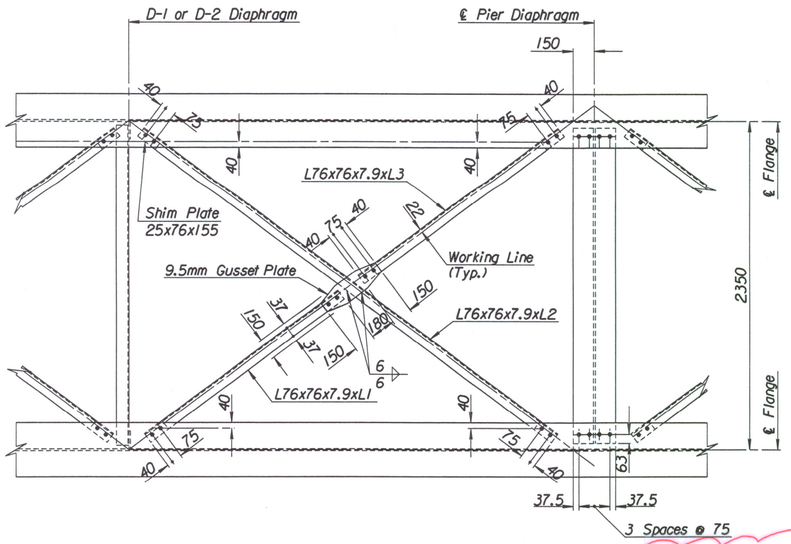

LATERAL BRACING DETAIL

See Framing Plan for Typical Locations.

TABLE OF LATERAL BRACING			
Location	L1	L2	L3
1	1791	3821	1850
2	1762	3764	1822
3	1710	3658	1768

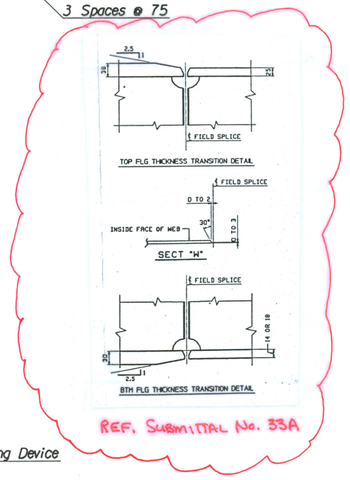

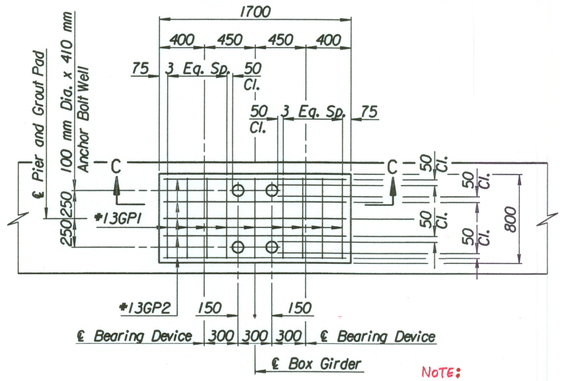

GROUT PAD PLAN

NOTE:
A 'roughened' construction joint is acceptable between the top of pier and grout pad. The #13GP1 & #13GP2 bars should extend into the top of pier, when pier structure is cast.

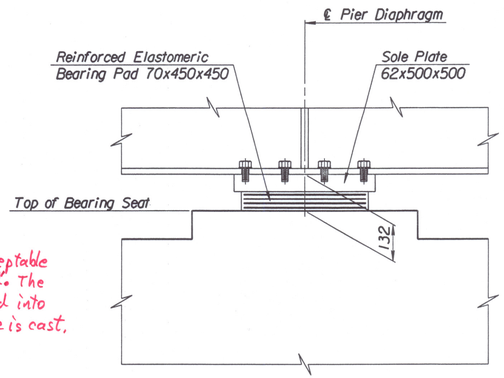

ELEVATION

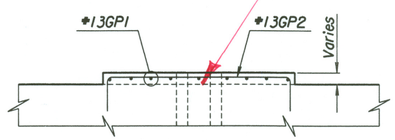

SECTION C-C

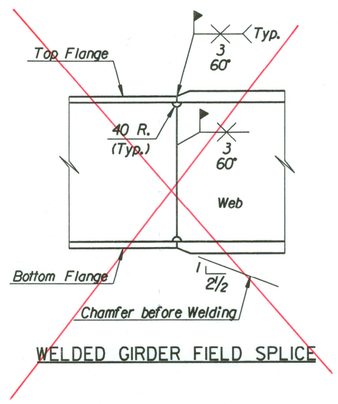

WELDED GIRDER FIELD SPLICE

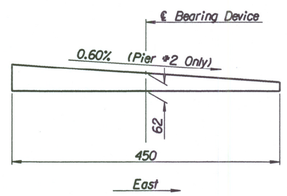

BEVELED SOLE PLATE DETAIL

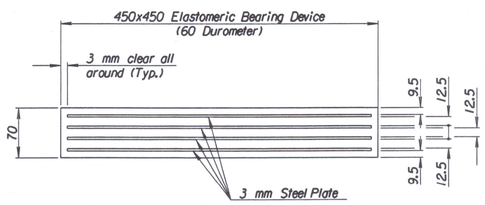

ELASTOMERIC BEARING DEVICE

(16 Required per Bridge)

ELASTOMERIC BEARING DEVICES:
The Elastomeric Bearing Devices shall be bonded to the (A709M Gr. 345) steel sole plates by a vulcanizing process after which the sole plates shall receive a shop coat of Inorganic Zinc Primer. All exposed surfaces of the sole plates shall receive the water-borne acrylic finish coat after the plates have been welded to the bottom of the girder. The sole plate is to be included in the bid item "Elastomeric Bearing Devices" and furnished by the bearing device fabricator.

STEEL REINFORCED ELASTOMERIC BEARINGS:
Bearings were designed using the provisions of Method A of the AASHTO Specifications.

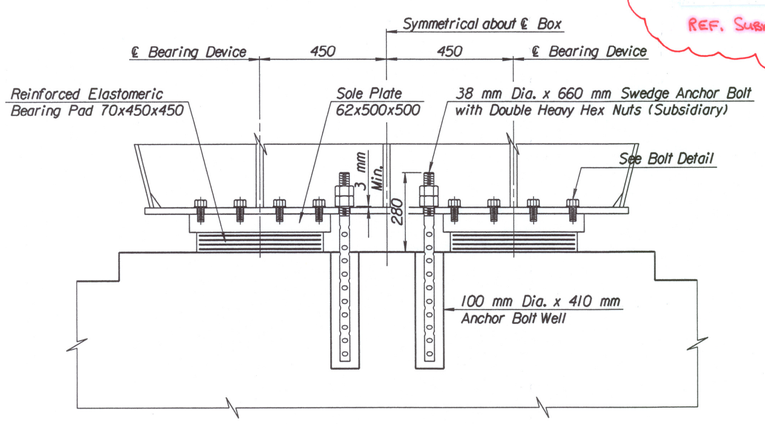

Note: Sole Plate may be Shop Welded to the Bottom Flange in lieu of using bolts or by Plug Welds in the field.

ELEVATION

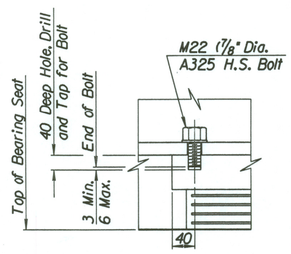

BOLT DETAIL

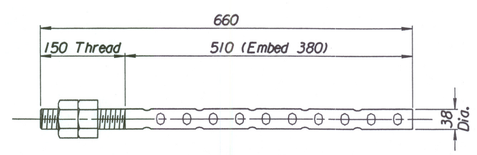

SWEDGE ANCHOR BOLT

(32 Required per Bridge)

ANCHOR BOLTS: Place the reinforcing bars below the bearing devices to clear the anchor bolts.

Anchor bolt placements must be adjusted based on Ambient Temperature. Anchor bolts should be centered in the Slotted Holes at 15°C. Relative adjustments shall be made based on 0.50mm of contraction or expansion per degree Celcius.

PREFORMED ANCHOR BOLT HOLES: Preform 100 mm diameter holes using corrugated polyethylene tubing (Type C) at the locations shown. Seal the preformed holes to prevent water from accumulating in the holes and freezing prior to the time of grouting the anchor bolts. The holes will be free of water or foreign materials at the time of grouting. This work and bolts shall be subsidiary to Concrete Grade 30 (AE) (SA).

No.	Revisions	By	Date
1			

CITY OF WICHITA
BR. NO. 54-87-19.05 (489) W.B. STA. 15+612.397
BR. NO. 54-87-19.06 (491) E.B. STA. 15+612.397

MISCELLANEOUS DETAILS

KELLOGG (US-54)
OVER MAIZE ROAD
SEDGWICK COUNTY

Professional Engineering Consultants, P.A.
303 S. TOPEKA • WICHITA, KANSAS 67202
316-262-2691 • FAX 316-262-3003

Designed by	P.D.F.	Checked by	R.A.S.	
Drawn by	W.L.L.	Date	April 2002	Job No. 97362

Drawn by: will
Plotted by: will 4-10-2002
i:/1997/97362/001/bridge/maizerd/MISCDET