STATE	PROJECT NO.	YEAR	SHEET NO.	TOTAL SHEETS
KANSAS	54-87 K-6657-01	2002	519	1122

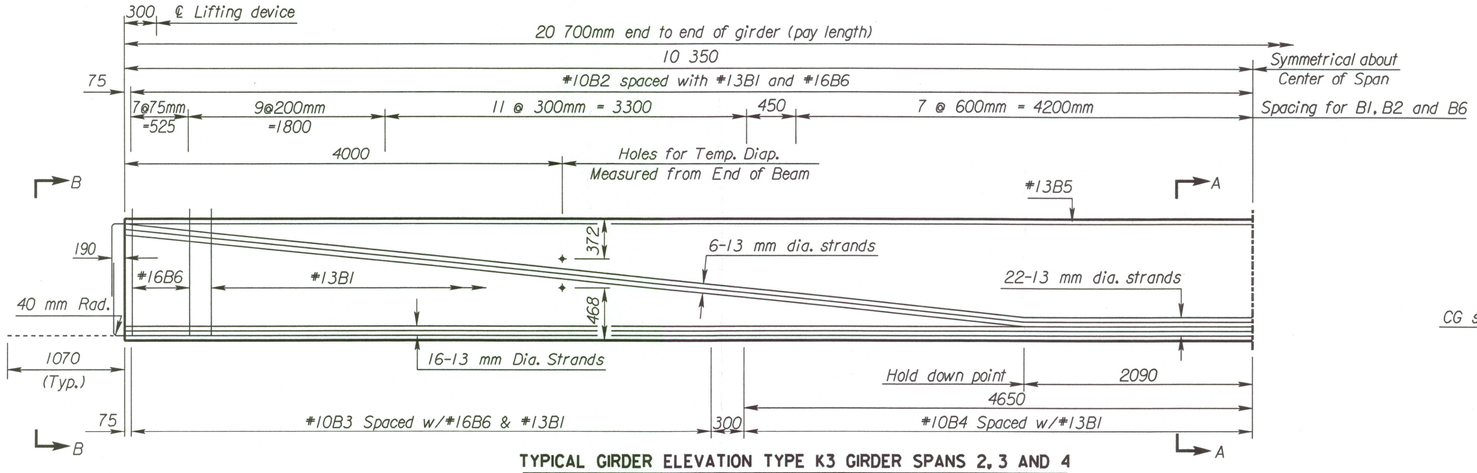

TYPICAL GIRDER ELEVATION TYPE K3 GIRDER SPANS 2, 3 AND 4

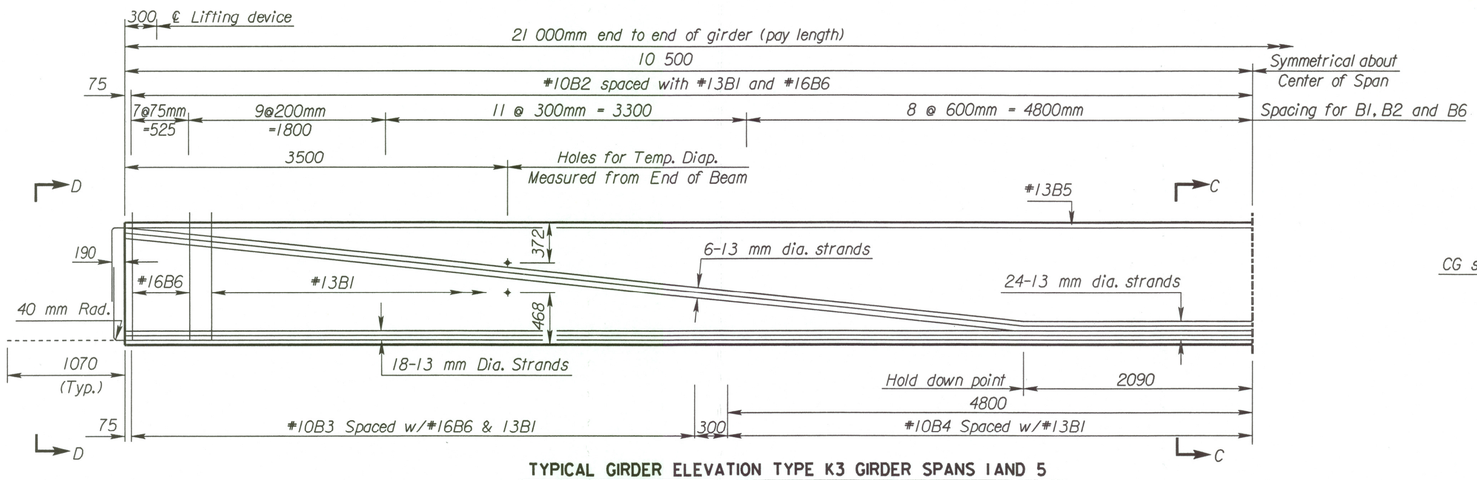

TYPICAL GIRDER ELEVATION TYPE K3 GIRDER SPANS 1 AND 5

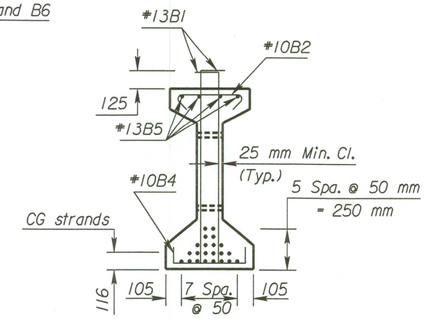

SECTION A-A

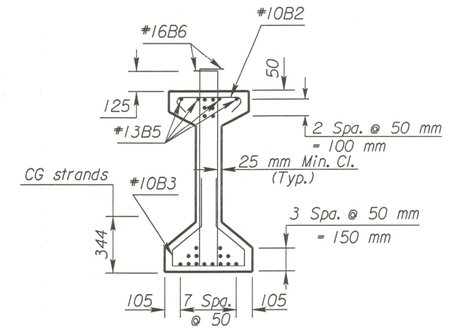

SECTION B-B

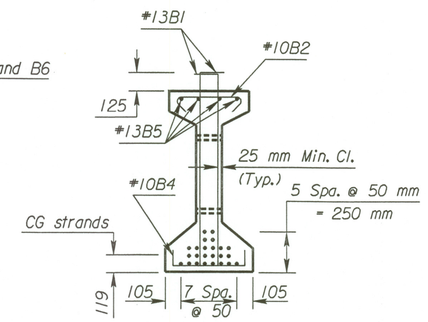

SECTION C-C

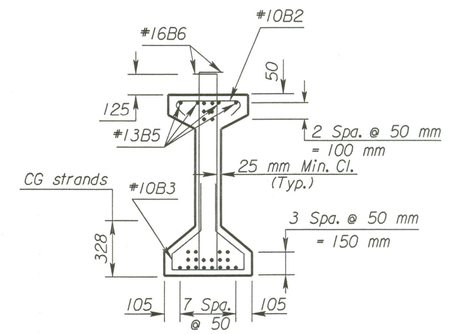

SECTION D-D

NOTE: During transportation and construction only, support beams on bearing points a maximum of 1520 mm from the beam end. The Fabricator shall show the proposed support locations on the shop drawings.
NOTE: The hold down force at the harp points for 6 strands at 13.98 kN per strand = 83.9 kN total.
NOTE: Epoxy coat all bars.

NOTE: Extend 8 strands 1070 mm beyond the end of the beam. Strands not shown shall be cut flush with the end of the beam. See "Strand Extension Details".

BILL OF REINFORCING STEEL

21.0 m Girder (1 Listed-16 Reqd.) (End spans)

Straight bars				Bent bars			
Mark	No.	Size	Length	Mark	No.	Size	Length
B5	8	#13	10700	B2	71	#10	620
				B3	54	#10	1610
				B4	17	#10	610
				B1	110	#13	1690
				B6	32	#16	1690

20.7 m Girder (1 Listed-24 Reqd.) (Interior spans)

Straight bars				Bent bars			
Mark	No.	Size	Length	Mark	No.	Size	Length
B5	8	#13	10550	B2	71	#10	620
				B3	54	#10	1610
				B4	17	#10	610
				B1	110	#13	1690
				B6	32	#16	1690

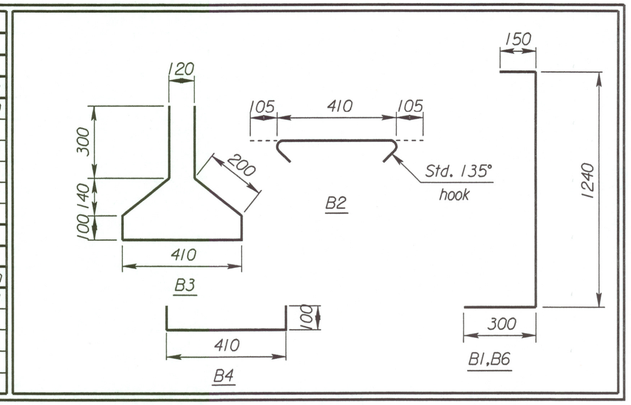

BILL OF MATERIAL

Item	Unit	Quantity
Prestressed concrete beams (K3) End spans (16)	m	336.0
Prestressed concrete beams (K3) Interior spans (24)	m	496.8
The following quantities are given for information only and shall not be paid for directly but shall be made subsidiary to the bid item "Prestressed Concrete Beams"		
Beam concrete ($f'c$ =40 MPa)($f'c_i$ =30 MPa)(per end span beam)	m^3	7.11
Beam concrete ($f'c$ =40 MPa)($f'c_i$ =30 MPa)(per interior span beam)	m^3	7.01
Approximate mass per 20 700 beam	t	16.3
Approximate mass per 21 000 beam	t	16.5
13 mm Ø Prestressing strand (Gr. 1860 low relaxation)	m	19 699
Epoxy reinforcing steel (Gr 420)	kg	17 290
Elastomeric bearing pads (20 mm x 200 mm x 560 mm)	Each	80
20 mm Dia. Coil tie inserts (NC Thread)	Each	——
20 mm Dia. x 450 mm Threaded coil rods	Each	——
Lifting devices	Each	80
Bearing plates (12 mm x 375 mm x 560 mm)	Each	80

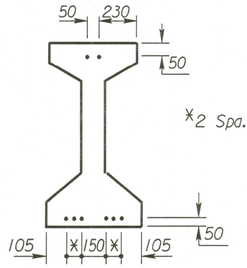

STRAND EXTENSION DETAIL
(20.7 m span beams)

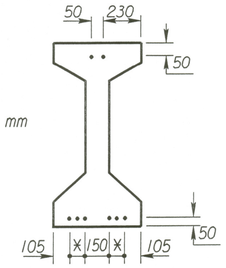

STRAND EXTENSION DETAIL
(21.0 m span beams)

NO.	DATE	REVISIONS	BY	APP'D
3				
2				
1	4-18-99	Current release		

CITY OF WICHITA

Br. No. 54-87-19.30(493) E.B. Sta. 16+011.650

K3 PRESTRESSED CONCRETE BEAM DETAILS
EASTBOUND KELLOGG (US-54)

Sedgwick Co.

SHEET NO. OF	DATE	APP'D	
DESIGNED	DETAILED	QUANTITIES	CADD
DESIGN CK.	DETAIL CK.	QUAN. CK.	CADD CK.

Plotted By : drp
Plot File : i:/1997/97362/001/bridge/cowskin/MAINLINE/k3beameb
Plot Date : 3-25-2002
Std. Base File : /usr2/stand/si/br302bsi.dgn
Server File : /usr
Server : witch
View: PLOT1