STATE	PROJECT NO.	YEAR	SHEET NO.	TOTAL SHEETS
KANSAS	54-87 K-6657-01	2002	521	1122

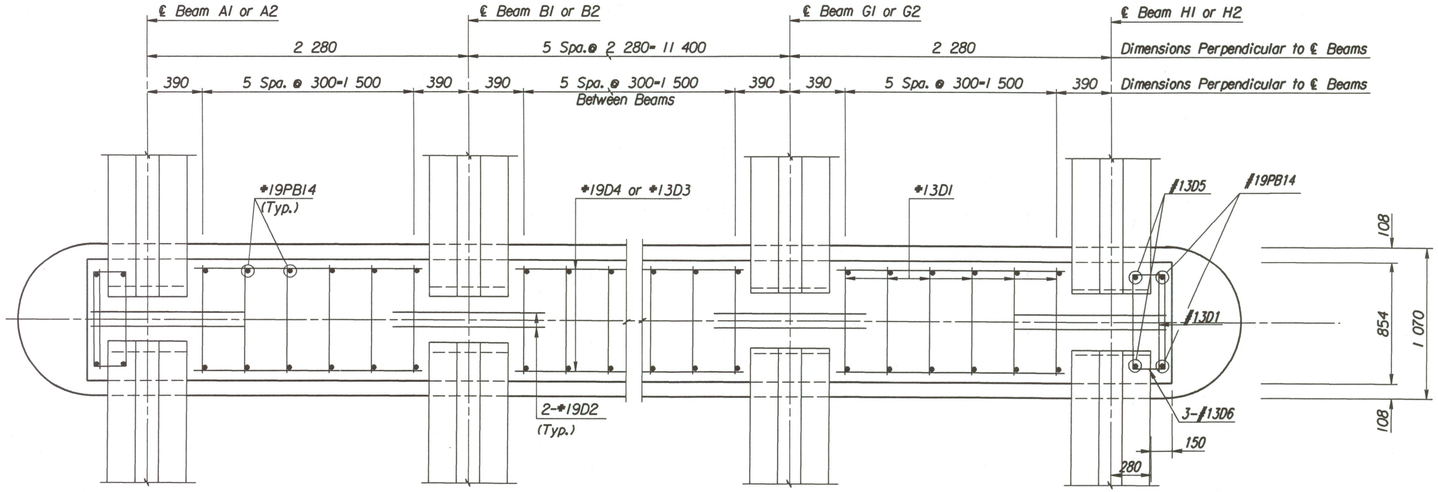

PLAN SECTION THRU PIER DIAPHRAGM

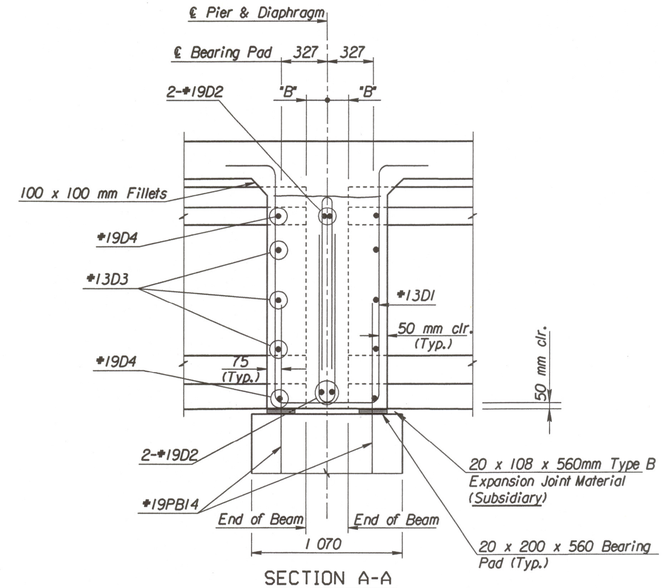

SECTION A-A

See Framing Plan for "B" dimensions

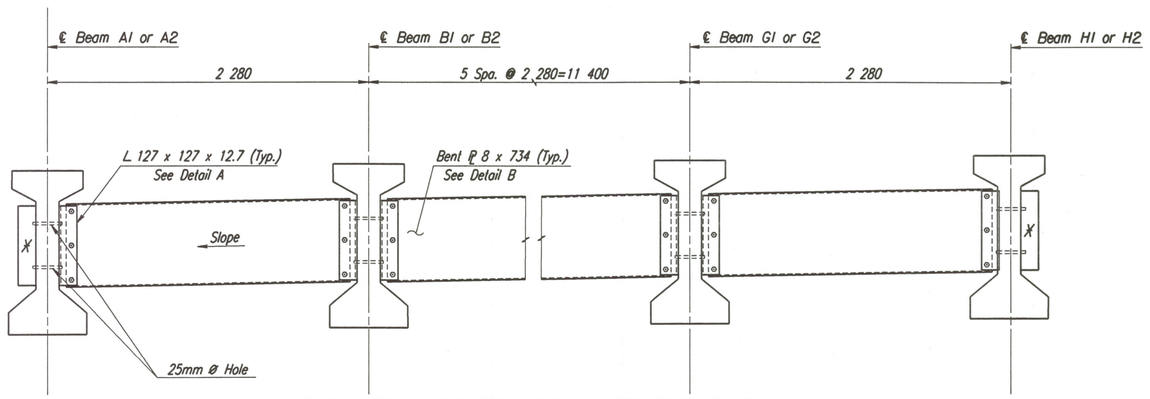

ELEVATION OF TEMPORARY DIAPHRAGMS

X Exterior Diaphragm Brackets Do Not Contain Attachment Holes for Bent ℙ.

DETAIL C

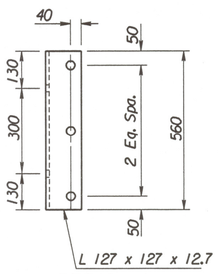

DETAIL A

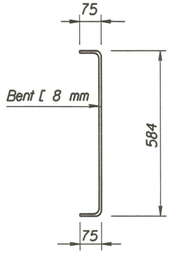

Note: 22 mm ! Holes for 20 mm ! Bolts.

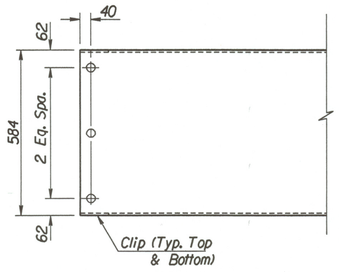

DETAIL B

TEMPORARY DIAPHRAGMS: Use ASTM A709M Gr. 250 steel for all angles and bent plates for temporary diaphragms. All bolts, nuts, and washers for fasteners shall conform to Heavy Hex ANSI B18.2.3.5M. Galvanize the angles, bolts, nuts, and washers in accordance with the KDOT Specifications. Install the temporary diaphragms, as shown in the details, prior to placing any superstructure concrete. Leave the temporary diaphragms in place until the concrete diaphragms and the deck have cured. Remove the angles from the girders and fill the holes in the prestressed beams with an approved epoxy grout. The bent plate diaphragms, angles, nuts, bolts, and washers shall remain the property of the Contractor. Use standard holes in the connection angles, oversized holes in one end of the diaphragm, and vertical long slotted holes in the other end of diaphragm. A hardened steel washer is required at oversized holes and a plate washer is required at the slotted hole locations. Submit shop drawings of the temporary diaphragms to the KDOT Bridge Section for review and approval. The material, equipment, and labor necessary for the installation and removal of the temporary diaphragms including filling the bolt holes, if required, shall not be paid for directly, but shall be subsidiary to the bid item "Prestressed Concrete Beams".

No.	Revisions	By	Date
1			

CITY OF WICHITA

BR. NO. 54-87-19.31(494) (W.B.) STA. 16+011.650

BR. NO. 54-87-19.30(493) (E.B.) STA. 16+011.650

DIAPHRAGM DETAILS

U.S. 54 OVER COWSKIN CREEK

SEDGWICK COUNTY

Professional Engineering Consultants, P.A.
303 S. TOPEKA • WICHITA, KANSAS 67202
316-262-2691 • FAX 316-262-3003

Designed by	RAS	Checked by	RAS	
Drawn by	BJS	Date April, 2002	Job No.	97362

DSNR: RAS OPER: BJS SCALE: 1:20
I:/1997/97362/001/BRIDGE/COWSKIN/MAINLINE/DIAPHRGM.DGN 3-25-2002