STATE	PROJECT NO.	YEAR	SHEET NO.	TOTAL SHEETS
KANSAS	54-87 K-6657-01	2002	526	1122

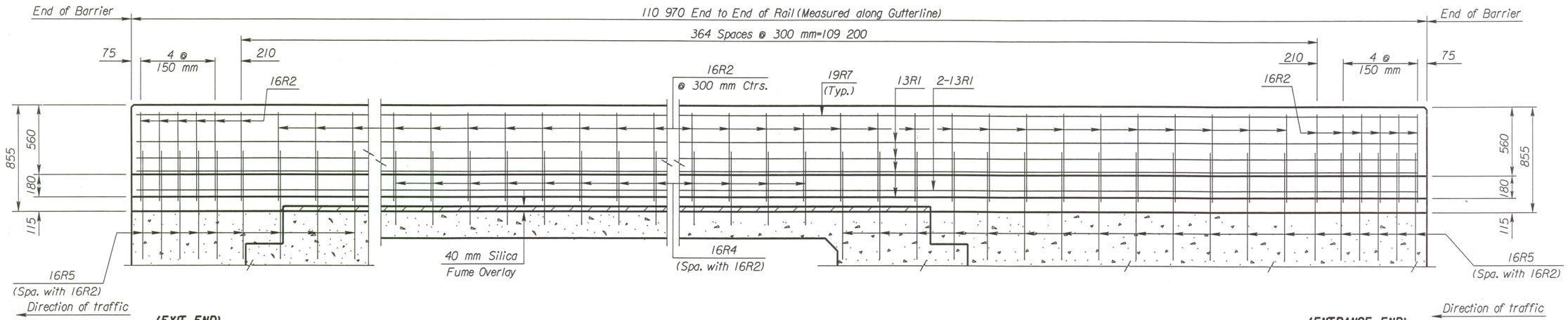

(EXIT END)

ELEVATION OF CONCRETE BARRIER CURB

(ENTRANCE END)

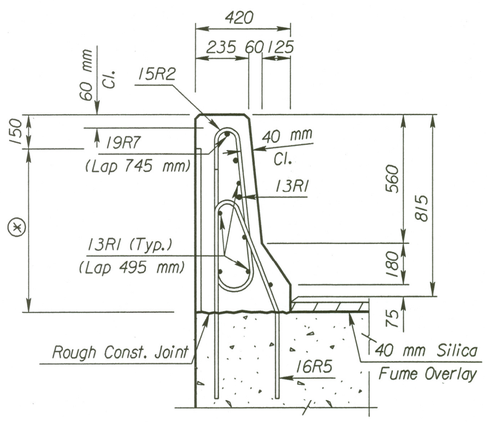

SECTION THRU BARRIER
EXIT TYPE END
(At abutment)

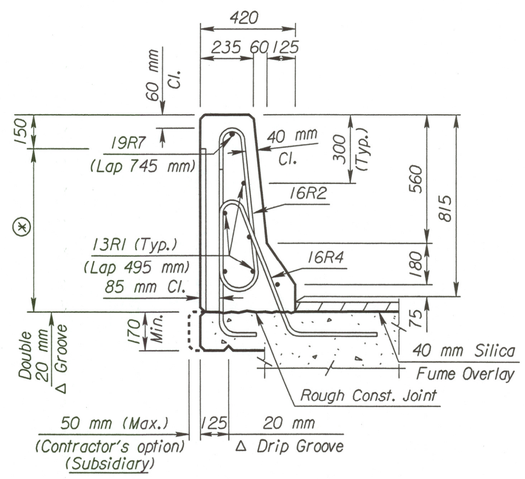

SECTION THRU BARRIER

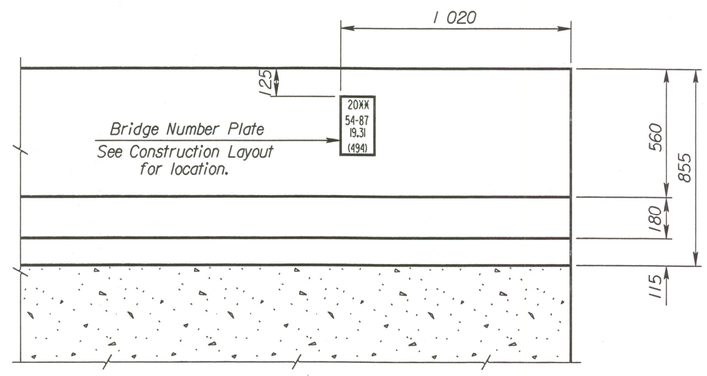

ELEVATION OF ENTRANCE TYPE END

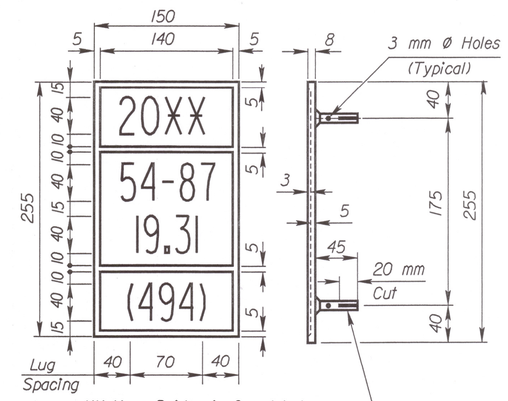

XX Year Bridge Is Completed.
2-10 mm Ø Lugs @ 75 mm Ctrs. (Top & Bottom)

BRIDGE NUMBER PLATE
(1 Required)
(See Construction Layout for Location)

Ⓧ Barrier Texturizing
See Misc. Barrier Detail Sheet

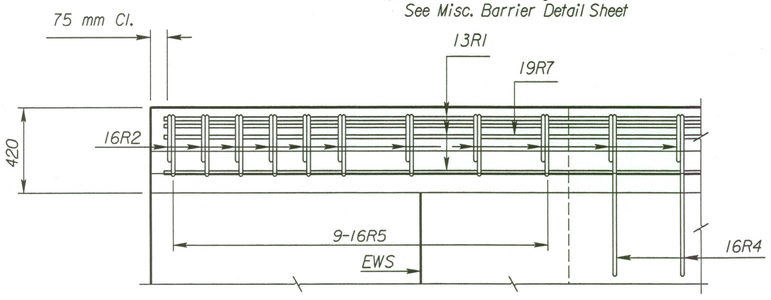

PLAN OF EXIT TYPE END

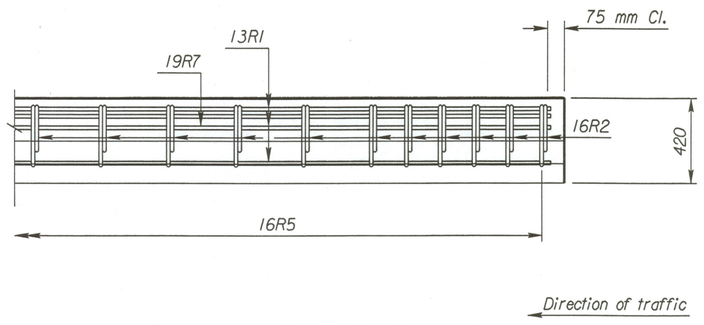

PLAN OF ENTRANCE TYPE END

NO.	DATE	REVISIONS	BY	APP'D
3				
2				
1	11-30-99	Current Release		

CITY OF WICHITA

Br. No. 54-87-19.31(494) W.B. Sta. 16+011.650

815 mm Exterior Rail

Sedgwick Co.

SHEET NO. OF	SCALE	APP'D	
DESIGNED	DETAILED	QUANTITIES	CADD
DESIGN CK.	DETAIL CK.	QUAN. CK.	CADD CK.

Plotted By : drp
Plot File : u997/97362/001/bridge/cawskin/MAINLINE/NBDbridineExt.dgn
Plot Date : 4-11-2002
Std. Base File :
Server File : usr2/stand/si/br184si.dgn
Server : witch
View= PLOT 1