STATE	PROJECT NO.	YEAR	SHEET NO.	TOTAL SHEETS
KANSAS	54-87 K-6657-01	2002	528	1122

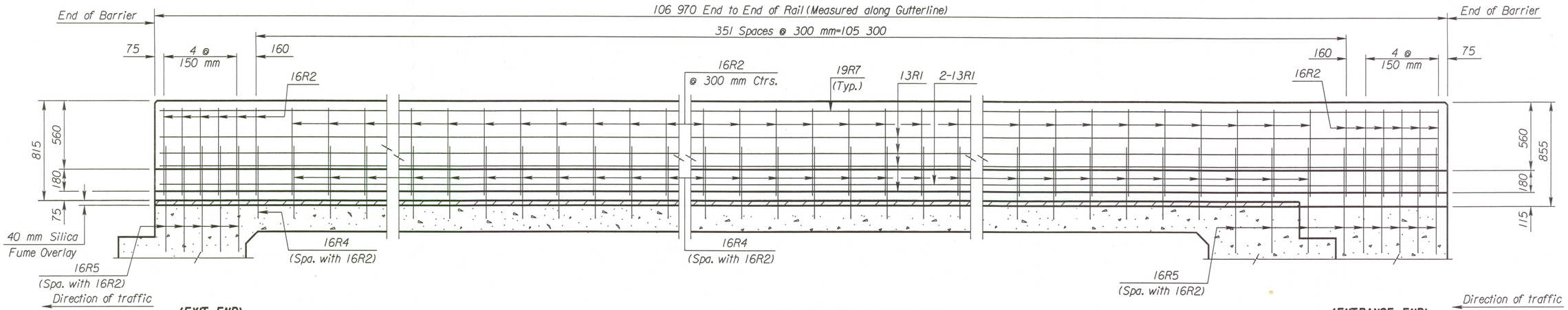

ELEVATION OF CONCRETE BARRIER CURB

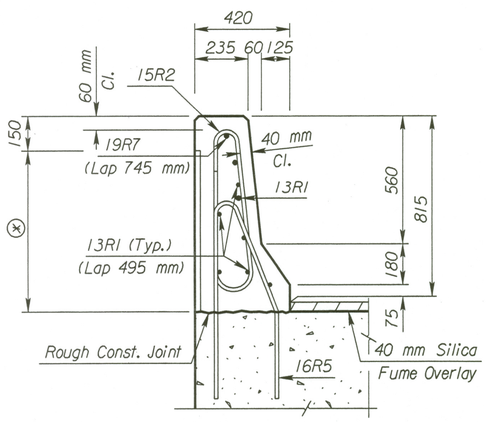

SECTION THRU BARRIER
EXIT TYPE END
(At abutment)

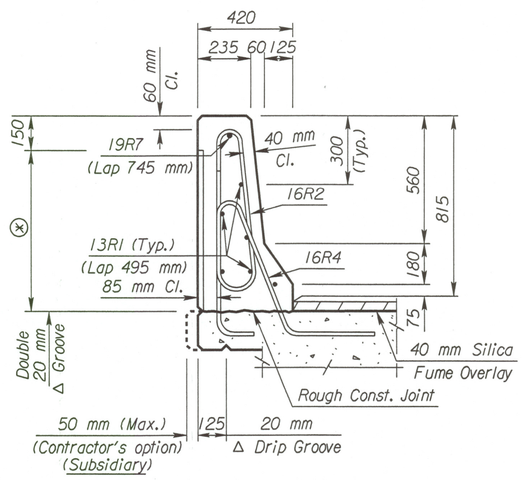

SECTION THRU BARRIER

⊛ Barrier Texturizing
See Misc. Barrier Detail Sheet

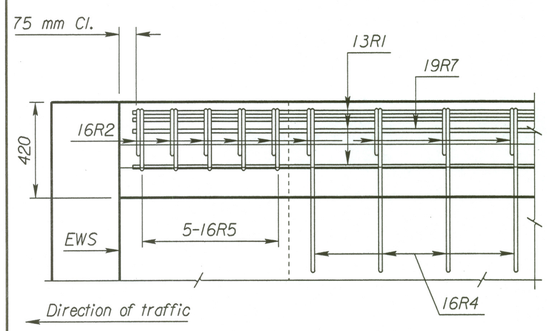

PLAN OF EXIT TYPE END

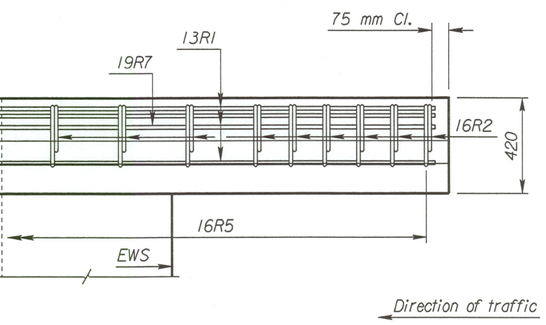

PLAN OF ENTRANCE TYPE END

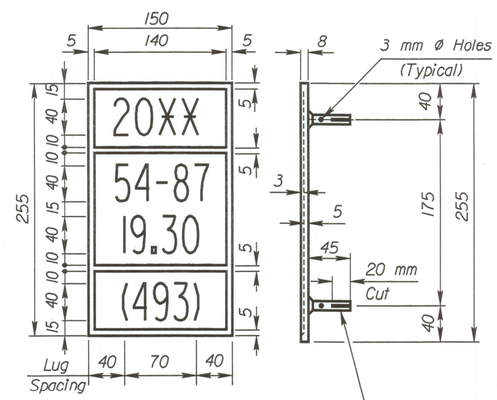

XX Year Bridge Is Completed.
2-10 mm Ø Lugs @ 75 mm Ctrs. (Top & Bottom)

BRIDGE NUMBER PLATE
(1 Required)
(See Construction Layout for Location)

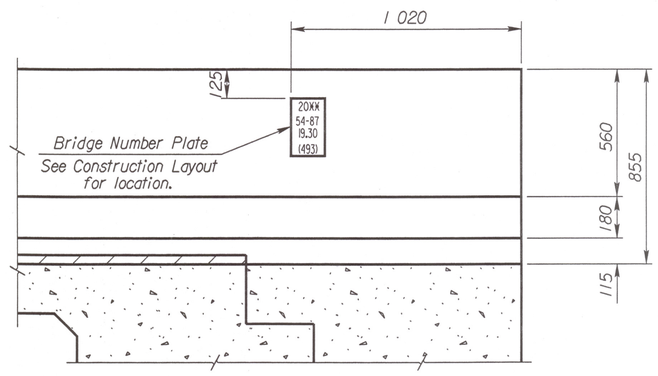

ELEVATION OF ENTRANCE TYPE END

NO.	DATE	REVISIONS	BY	APP'D
3				
2				
1	11-30-99	Current Release		

CITY OF WICHITA
Br. No. 54-87-19.30(493) E.B. Sta. 16+011.650

815 mm Exterior Rail

Sedgwick Co.

SHEET NO. OF	SCALE	APP'D	
DESIGNED	DETAILED	QUANTITIES	CADD
DESIGN CK.	DETAIL CK.	QUAN. CK.	CADD CK.

Std. Base File :
Server File : usr2/stand/si/br184osi.dgn
Server : witch
View= PLOT 1
Plotted By : drp
Plot File : h:\997\973\62\001\bridge\cowskin\mainline\EBMainlineExt.dgn
Plot Date : 3-26-2002