STATE	PROJECT NO.	YEAR	SHEET NO.	TOTAL SHEETS
KANSAS	54-87 K-6657-01	2002	601	1122

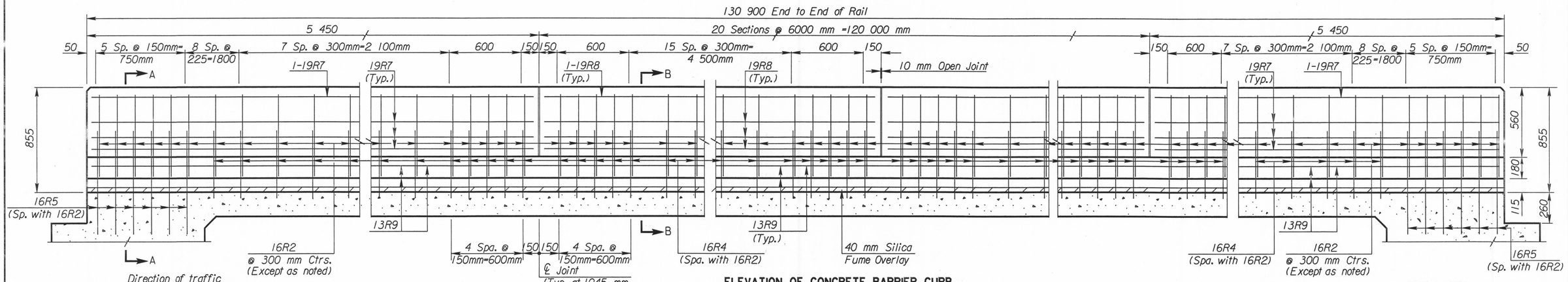

ELEVATION OF CONCRETE BARRIER CURB

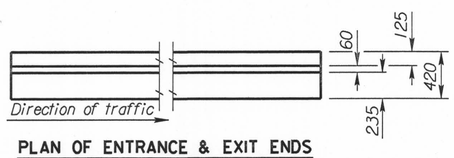

PLAN OF ENTRANCE & EXIT ENDS

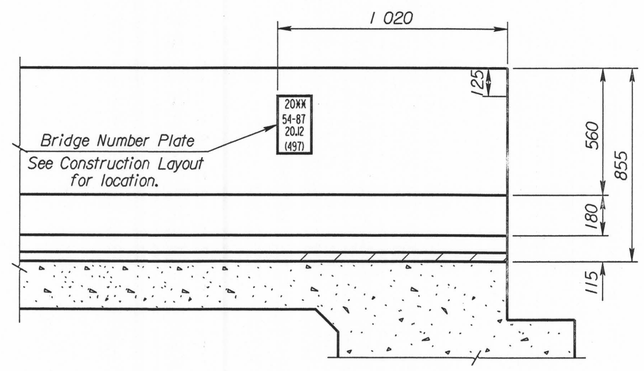

ELEVATION OF ENTRANCE TYPE END

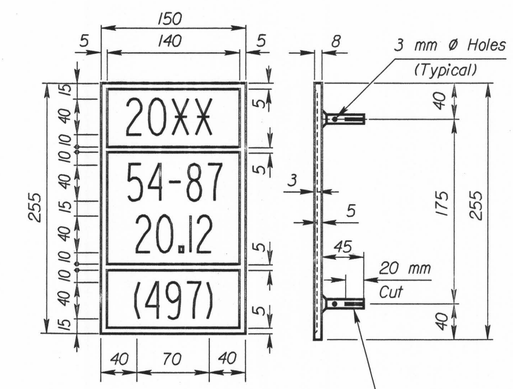

XX Year Bridge Is Completed.
2-10 mm Ø Lugs @ 75 mm Ctrs. (Top & Bottom)

BRIDGE NUMBER PLATE

(1 Required)
(See Construction Layout for Location)

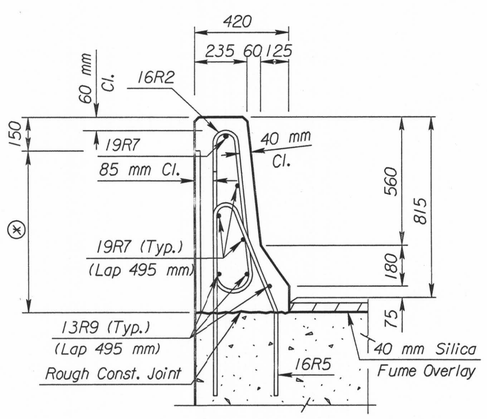

SECTION THRU BARRIER
EXIT TYPE END
(At abutment)

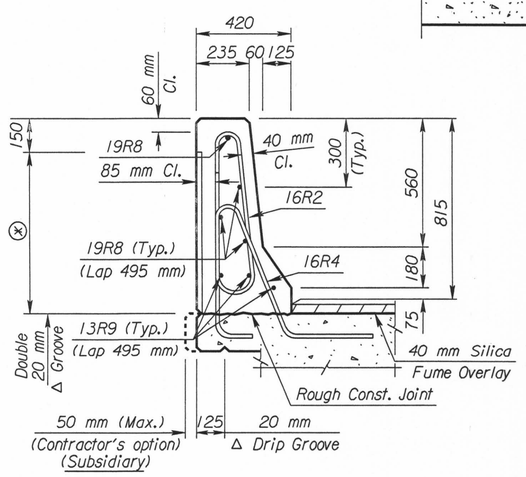

SECTION THRU BARRIER

⊛ Barrier Texturizing
See Misc. Barrier Detail Sheet

NO.	DATE	REVISIONS	BY	APP'D
3				
2				
1	10-27-00	Current Release		

CITY OF WICHITA
Br. No. 54-87-20.12(497) E.B. Sta. 17+332.607
815mm F2 BARRIER CURB
SOUTH RAIL
KELLOGG (US 54) OVER TYLER ROAD
SEDGWICK Co.

SHEET NO. OF	SCALE	APP'D	
DESIGNED	DETAILED	QUANTITIES	CADD
DESIGN CK.	DETAIL CK.	QUAN. CK.	CADD CK.

View: PLOT 1
Std. Base File : br185osi.dgn
Plotted By : svb
Server File :
Plot File : i:\1997\97362\001\bridge\tyler\815SouthRail.dgn
Server : witch
Plot Date : 3-22-2002