STATE	PROJECT NO.	YEAR	SHEET NO.	TOTAL SHEETS
KANSAS	54-87 K-6657-01	2002	757	1122

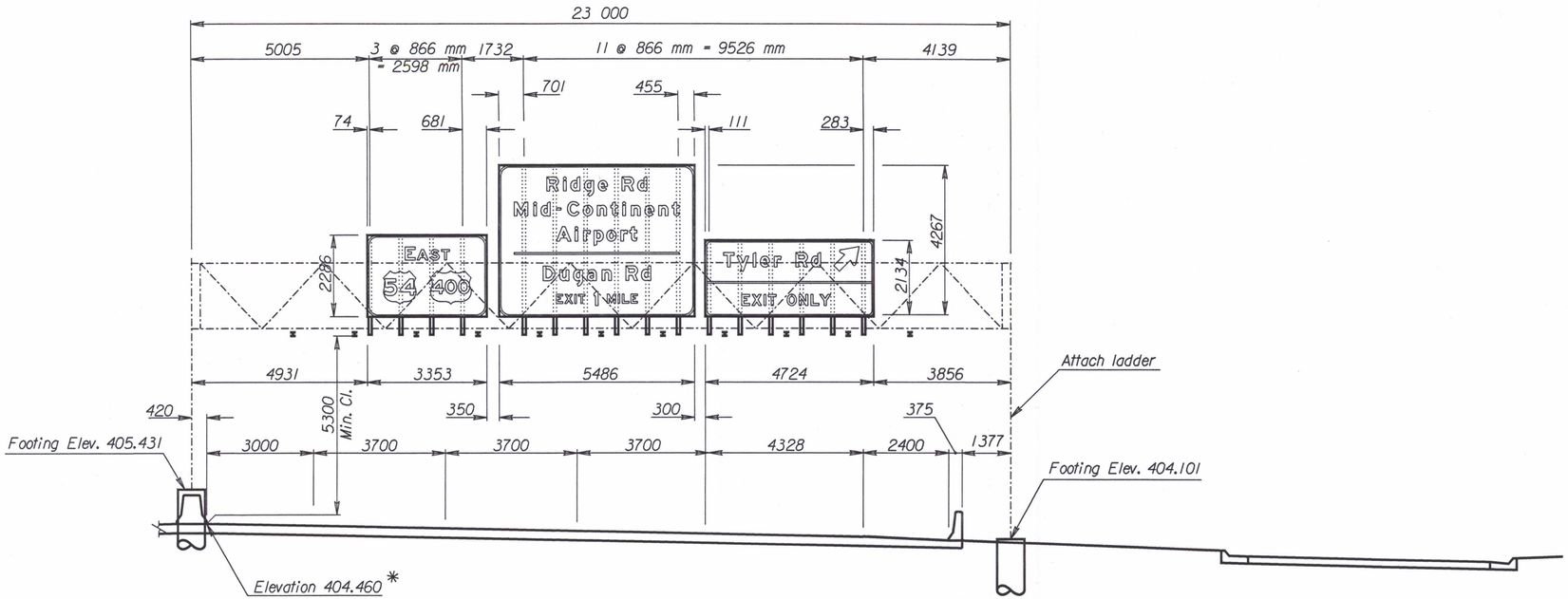

* Note: Use this point as a control point for all elevations.

ELEVATION

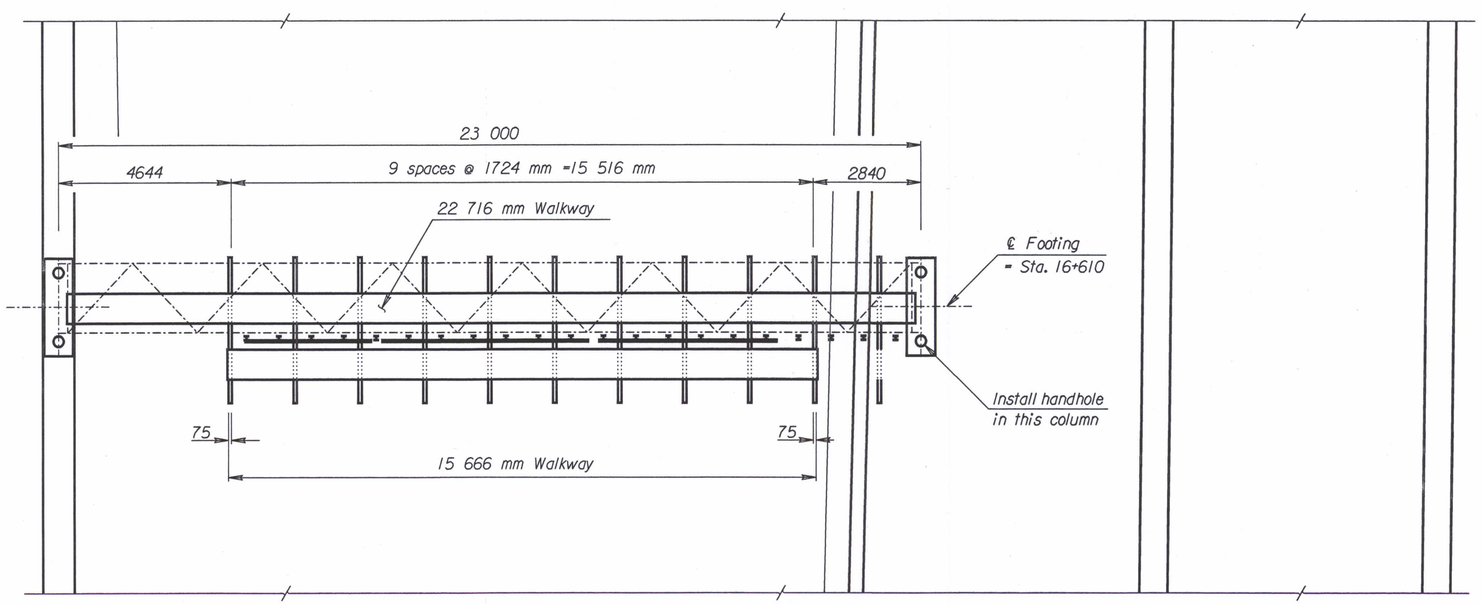

PLAN

STEEL NOT USED.

STEEL DETAILS						
TRUSS	Member 1 Wall Thickness					7.11
	Member 2 Wall Thickness					5.16
	N= 13	X = 242	S = 1732		Camber = 30	
END SUPPORTS	Member 1 Wall Thickness					7.92
	Member 2 Wall Thickness					5.49
	Left	N = 2	S = 2050	L = 6520		
	Right	N = 2	S = 1835	L = 7870		
FOOTINGS	Left Type	F	Right Type	F		

Scale 1:75

NO.	DATE	REVISIONS	BY	APP'D
3				
2				
1				

KANSAS DEPARTMENT OF TRANSPORTATION

EB US-54 STATION 16+610

SPAN TYPE OVERHEAD SIGN STRUCTURE
CONSTRUCTION LAYOUT
STEEL ALTERNATE

PROJ. NO. 54-87 K-6657-01 SEDGWICK CO.

SHEET NO. 13 OF 44		SCALE		APP'D	
DESIGNED	SMB	DETAILED	SMB	QUANTITIES	CADD
DESIGN CK.		DETAIL CK.		QUAN. CK.	CADD CK.

Plotted By: $$USERNAME$$ | Plot Location: $UNIT$
File: $$$$$$$$$$$DGNSPEC$$$$$$$$$$$$
Plot Date: $$$$$$SYTIME$$$$$$