| STATE | PROJECT NO. | YEAR | SHEET NO. | TOTAL SHEETS |
|---|---|---|---|---|
| KANSAS | 54-87 K-6657-01 | 2002 | 765 | 1122 |

NOTE: Restore any existing facilities, (i.e., curb and gutter, guard fence, pavement, shoulders, etc.), whose removal is required in order to construct the footing, to their original condition at no additional expense. Use sawed joints when removing any existing concrete.

** Note: Place a 16 mm diameter greased rod in the grout at the support to form a drain. Remove the rod after the grout has taken set.

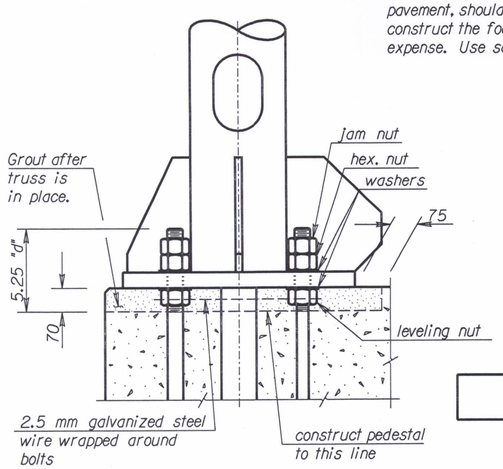


DETAIL A

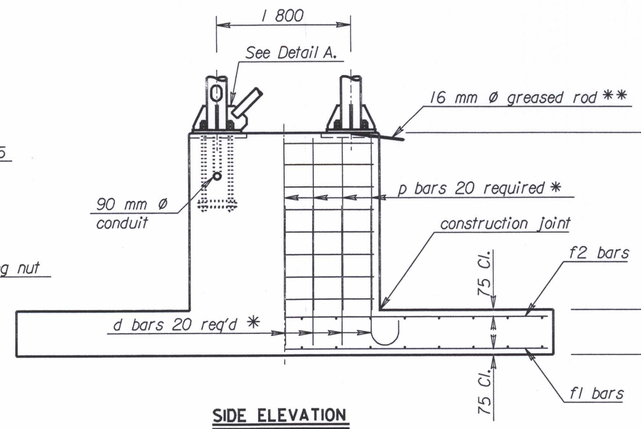


SIDE ELEVATION

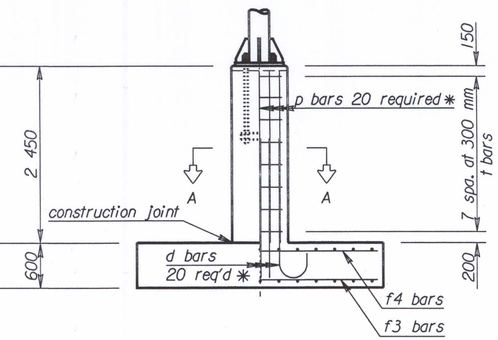


END ELEVATION

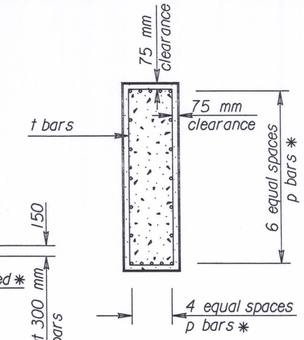


SECTION A-A

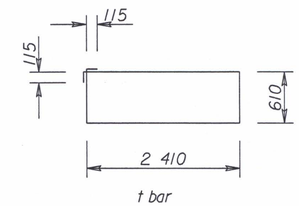


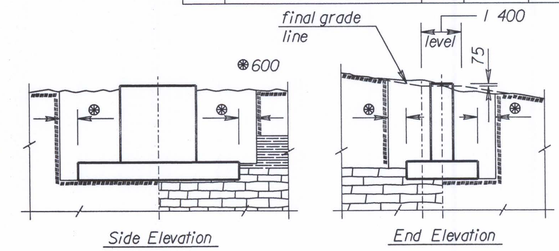


TYPICAL EXCAVATION DETAILS

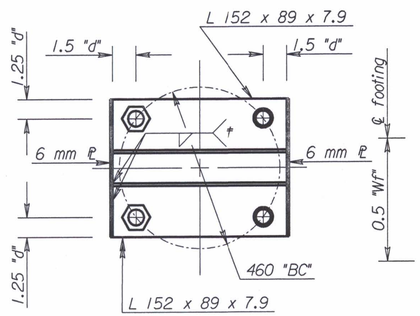


SECTION B-B

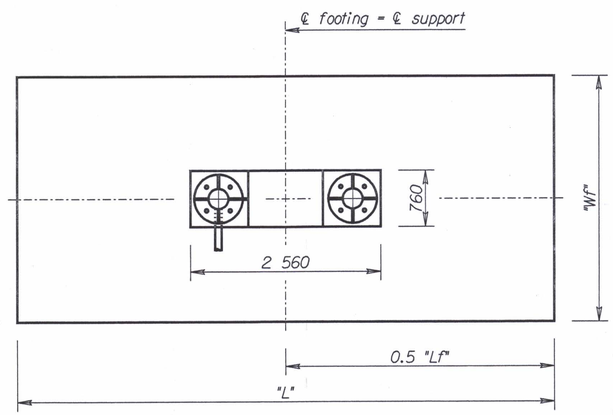


FOOTING PLAN

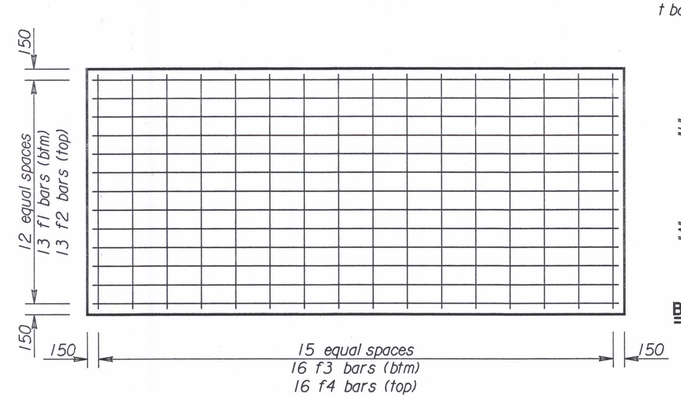


FOOTING PLAN
(Showing reinforcing steel)

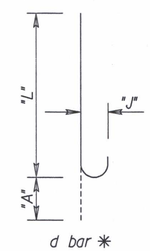


BENDING DIAGRAMS

All dimensions are out to out of bars.

GENERAL NOTES

LOADING: AASHTO Standard Specifications for Structural Supports for Highway Signs, Luminaires and Traffic Signals, 1994 Edition.

CONCRETE: Use Grade 25 (AE) Concrete throughout. Bevel all exposed edges with a 20 mm triangular molding.

CURING AND ERECTING: Cure the concrete a minimum of 4 days. Do not erect the sign structure before 15 days have passed, unless flexural beam tests indicate that the concrete has attained sufficient strength.

UNIT STRESSES: fc=8 MPa; fc'=20 MPa; fs=140 MPa

REINFORCING: All dimensions relative to reinforcing steel are to center line of bar unless otherwise noted. Use steel which conforms to ASTM A615M Grade 300 or 420.

EXCAVATION: When rock or hard shale is encountered, excavate to neat lines all excavation below the top of this material or the top of the footing, whichever is lower. See excavation details.

BACKFILL: Place backfill material in 300 mm lifts and compact each lift thoroughly before placing the next lift.

ANCHOR BOLT ASSEMBLY: Use anchor bolts which conform to the "Standard Specifications for State Road and Bridge Construction" Subsection 1613 and are Type II. Use angles and plates which conform to ASTM A709M. Weld in accordance with the "Standard Specifications for State Road and Bridge Construction" and the latest edition of the American Welding Society Specifications.

PAYMENT: Include the cost of all material and labor needed to construct its footing in the unit price bid for each "Span Type Overhead Sign Structure".

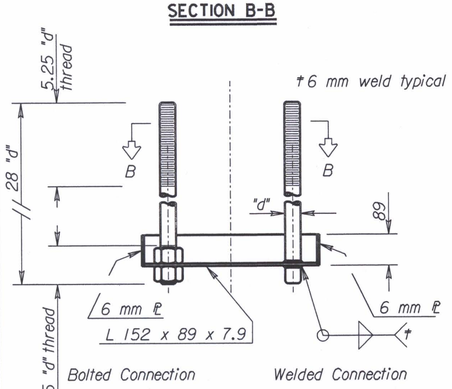


ANCHOR BOLT ASSEMBLY DETAIL

See end support framing plan sheet for anchor bolt "d".

See "Construction Layout" sheet for Footing Type.

* Note: Contractor may combine d and p bars into one bar.

| FOOTING TYPE | DIMENSIONS | | BILL OF REINFORCING STEEL | | | | | | | | | | | | | | SUMMARY OF QUANTITIES | | |
|---|---|---|---|---|---|---|---|---|---|---|---|---|---|---|---|---|---|---|---|
| | Lf | Wf | 20 d bars * | | 13 f1 bars | | 13 f2 bars | | 16 f3 bars | | 16 f4 bars | | 20 p bars * | | 8 t bars | | Class III Excavation cu. m. ** | Gr.25(AE) Concrete cu. m. | Reinforcing Steel kg. |
| | | | Size | Length | Size | Length | Size | Length | Size | Length | Size | Length | Size | Length | Size | Length | | | |
| A | 4 600 | 2 100 | 19 | 1 370 | 13 | 4 450 | 13 | 4 450 | 13 | 1 950 | 13 | 1 950 | 19 | 2 375 | 13 | 6 270 | 55 | 10.6 | 390 |
| B | 4 900 | 2 250 | | 1 370 | | 4 750 | | 4 750 | | 2 100 | | 2 100 | | | | | 60 | 11.4 | 400 |
| C | 5 200 | 2 400 | 22 | 1 470 | | 5 050 | | 5 050 | | 2 250 | | 2 250 | 22 | | | | 67 | 12.3 | 480 |
| D | 5 500 | 2 500 | | 1 470 | | 5 350 | | 5 350 | | 2 350 | | 2 350 | | | | | 71 | 13.0 | 490 |
| E | 5 800 | 2 650 | 25 | 1 660 | 16 | 5 650 | 16 | 5 650 | | 2 500 | | 2 500 | 25 | | | | 77 | 14.0 | 670 |
| F | 6 100 | 2 800 | | 1 660 | 19 | 5 950 | 19 | 5 950 | | 2 650 | | 2 650 | | | | | 84 | 15.0 | 790 |
| G | 6 400 | 2 950 | 29 | 1 930 | | 6 250 | | 6 250 | 16 | 2 800 | 16 | 2 800 | 29 | | | | 91 | 16.1 | 980 |
| H | 6 700 | 3 100 | | 1 930 | 22 | 6 550 | 22 | 6 550 | | 2 950 | | 2 950 | | | | | 98 | 17.3 | 1 150 |
| I | 7 000 | 3 250 | 32 | 2 210 | | 6 850 | | 6 850 | 19 | 3 100 | 19 | 3 100 | 32 | | | | 106 | 18.5 | 1 400 |
| J | 7 300 | 3 400 | 36 | 2 560 | 25 | 7 150 | 25 | 7 150 | | 3 250 | | 3 250 | 36 | | | | 113 | 19.8 | 1 800 |

** Approximate Excavation for loose material

TABLE FOR "d" BARS

| Size | A | J | L |
|---|---|---|---|
| 19 | 220 | 160 | 1 150 |
| 22 | 250 | 180 | 1 220 |
| 25 | 280 | 200 | 1 380 |
| 29 | 400 | 300 | 1 530 |
| 32 | 430 | 340 | 1 780 |
| 36 | 480 | 360 | 2 080 |

SPREAD FOOTING NOT USED.

| NO. | DATE | REVISIONS | BY | APP'D |
|---|---|---|---|---|
| 1 | 3/20/02 | Concrete from Class to Grade | SMB | KFH |

KANSAS DEPARTMENT OF TRANSPORTATION

STANDARD STRUCTURAL SIGN SUPPORTS
SPAN TYPE OVERHEAD
OPTIONAL SPREAD FOOTING DETAILS

SL151A-02 SI — SEDGWICK CO.

FHWA APPROVAL 4-10-97 APP'D Kenneth F. Hunt

| | | | | | | | |
|---|---|---|---|---|---|---|---|
| DESIGNED | KFH | DETAILED | KFH | QUANTITIES | KFH | CADD | DJE |
| DESIGN CK. | LES | DETAIL CK. | LES | QUAN.CK. | LES | CADD CK. | DCD |

Std. Base File: sl151asi.dgn - Plot 2
Plotted By: $$USERNAME$$ | Plot Location: $UNIT$
File: $$$$$$$$$$$$$$DGNSPEC$$$$$$$$$$$$$$$
Plot Date: $$$$$$$STIME$$$$$$