STATE	PROJECT NO.	YEAR	SHEET NO.	TOTAL SHEETS
KANSAS	54-87 K-6657-01	2002	776	1122

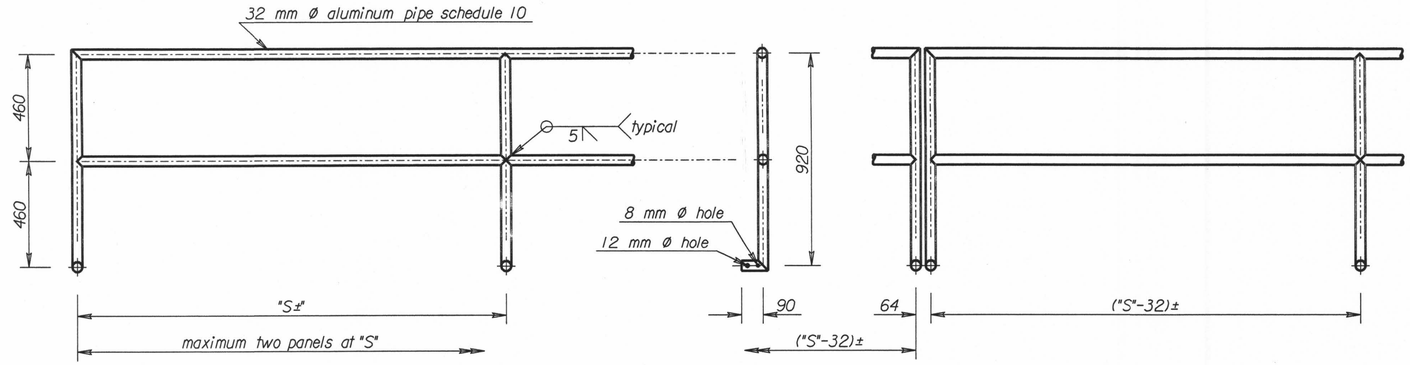

ALUMINUM HANDRAIL

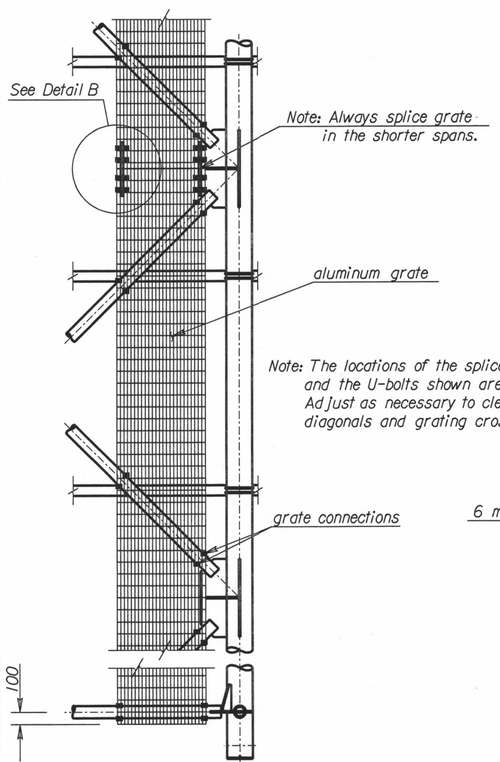

PLAN

(Only lower truss members shown)

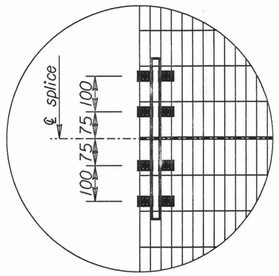

Detail B

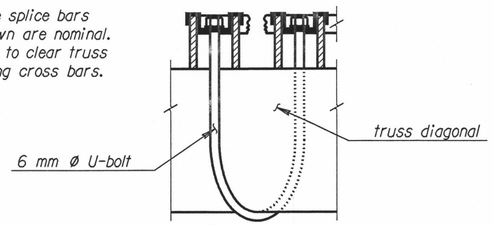

Elevation

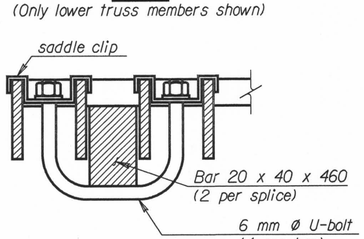

Splice Detail

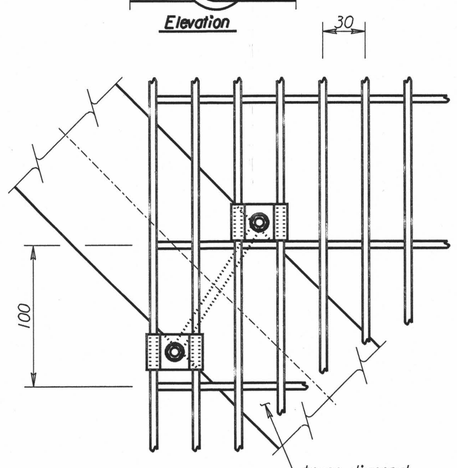

Plan

INTERIOR GRATE CONNECTION DETAILS

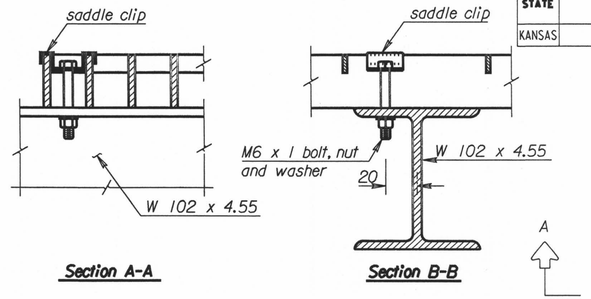

Section A-A

Section B-B

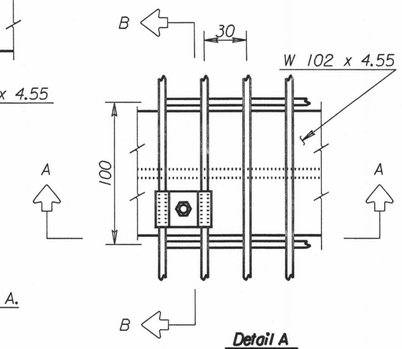

Detail A

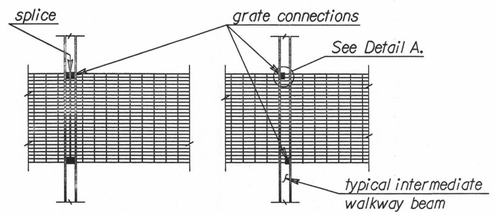

Plan

EXTERIOR GRATE CONNECTION DETAILS

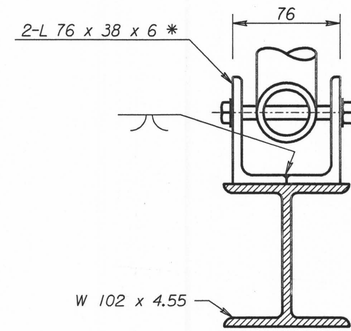

Single Hinge

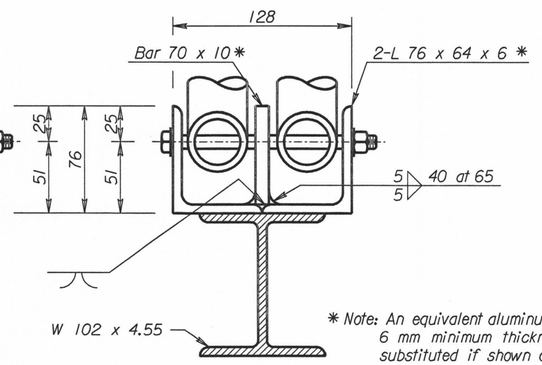

Double Hinge

End Views

* Note: An equivalent aluminum extrusion 6 mm minimum thickness may be substituted if shown on shop drawing submittal.

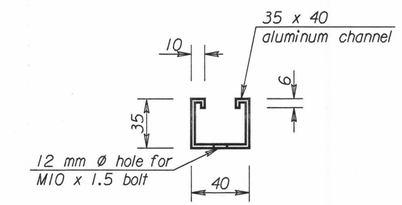

LIGHTING FIXTURE CHANNEL

2.5 mm typical wall thickness

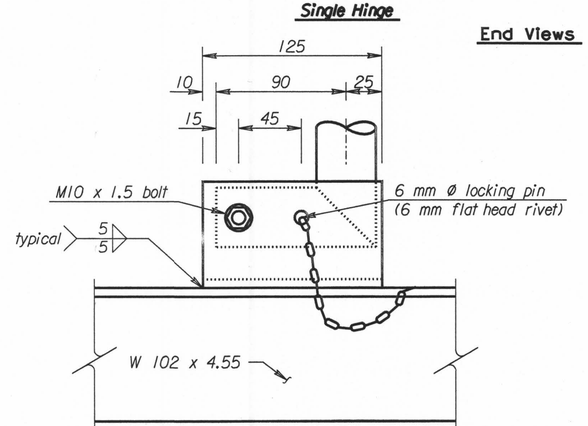

Rail in Use

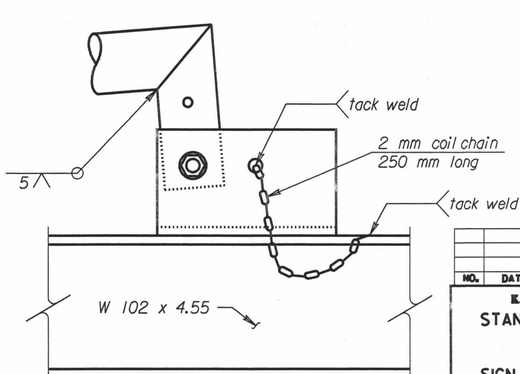

Rail Not in Use

HANDRAIL CONNECTIONS

NO.	DATE	REVISIONS	BY	APP'D

KANSAS DEPARTMENT OF TRANSPORTATION

STANDARD STRUCTURAL SIGN SUPPORT
SPAN TYPE OVERHEAD
ALUMINUM ALTERNATE
SIGN MOUNTING AND WALKWAY DETAILS

SL151B-09 SI — SEDGWICK CO.

FHWA APPROVAL		4-10-97	APP'D			Kenneth F. Hurst	
DESIGNED	BFM	DETAILED	JD/RH	QUANTITIES		CADD	DJE
DESIGN CK.	KFH	DETAIL CK.	KFH	QUAN.CK.		CADD CK.	LES

Std. Base File: sl151bsi.dgn - Plot 9
Plotted By: $$USERNAME$$ Plot Location: $UNIT$
File: $$$$$$$$$$$$DGNSPEC$$$$$$$$$$$$$$
Plot Date: $$$$$STIME$$$$$$